FUJITSU

FOUR ROOM MULTI
INVERTER SYSTEM

# SERVICE MANUAL

Refrigerant
R410A

| Outdoor unit | Indoor unit |
|---|---|
| AOAG30LAT4 | ASAG07LJCA |
| | ASAG09LJCA |
| | ASAG12LJCA |
| | ASYG07LUCA |
| | ASYG09LUCA |
| | ASYG12LUCA |
| | ASAG18LFCA |
| | ASAG24LFCA |
| | AUAG09LVLA |
| | AUAG12LVLA |
| | AUAG14LVLA |
| | AUAG18LVLA |
| | UTG-UFYD-W |
| | ARAG09LLLA |
| | ARAG12LLLA |
| | ARAG14LLLA |
| | ARAG18LLLA |
| | ARAG24LLLA |

## CONTENTS



FUJITSU GENERAL LIMITED

# SPECIFICATIONS

## OUTDOOR UNIT

### ELECTRICAL SPECIFICATIONS

| | | |
|---|---|---|
| TYPE | | Four room multi inverter |
| MODEL NAME | | AOAG30LAT4 |
| COOLING CAPACITY | | 8.0 kW |
| HEATING CAPACITY | | 9.6 kW |
| POWER SUPPLY | | 230 V |
| FREQUENCY | | 50 Hz |
| RUNNING CURRENT | Cooling | 9.7 A |
| | Heating | 10.5 A |
| INPUT | Cooling | 2.22 kW |
| | Heating | 2.40 kW |
| E.E.R. | Cooling | 3.60 kW/kW |
| | Heating | 4.00 kW/kW |
| AIR CIRCULATION HIGH | Cooling | 3,500 m3/hr |
| | Heating | 3,300 m3/hr |

### FAN MOTOR

| | |
|---|---|
| DISCRIMINATION | MFE-60TVT |
| COOLING | 820 r.p.m. |
| HEATING | 780 r.p.m. |

### NOISE LEVEL

| | |
|---|---|
| COOLING | 50dB |
| HEATING | 51dB |

### COMPRESSOR AND REFRIGERANT

| | | |
|---|---|---|
| TYPE | | Hermetic type, Inverter, 4 poles, 3-phase, DC motor, Twin Rotary |
| DISCRIMINATION | | TNB220FPBMT |
| WEIGHT (with oil) | | 14.3 kg |
| PRECHARGED REFRIGERANT | | 3,300 g |
| REFRIGERANT TYPE | | R410A |
| FULL CHARGE Total pipe length | 50 m | 3,300 g |
| | 60 m | 3,550 g |
| | 70 m | 3,800 g |
| ADDITIONAL CHARGE | | 25 g/m |
| MAXIMUM PIPE LENGTH (total) | | 70 m |
| MINIMUM PIPE LENGTH (total) | | 20 m |
| MAXIMUM PIPE LENGTH (each unit) | | 25 m |
| MINIMUM PIPE LENGTH (each unit) | | 5 m |
| MAX ELEVATION (between indoor units) | | 10 m |
| (between indoor and outdoor units) | | 15 m |

### MEASUREMENT

| | | |
|---|---|---|
| DIMENSIONS | H x W x D | 830 x 900 x 330 mm |
| WEIGHT | Net / Shipping | 68 kg / 75 kg |

INDOOR UNIT
COMPACT WALL MOUNTED

## ELECTRICAL DATA

| MODEL NAME | ASAG07LJCA | ASAG09LJCA | ASAG12LJCA |
|---|---|---|---|
| CAPACITY | 2.0 kW class | 2.5 kW class | 3.5 kW class |

## FAN MOTOR

| DISCRIMINATION | | | MFD-12TYAN | | |
|---|---|---|---|---|---|
| FAN SPEED | Cooling | High | 1,050 r.p.m. | 1,100 r.p.m. | 1,200 r.p.m. |
| | | Medium | 950 r.p.m. | 980 r.p.m. | 1,050 r.p.m. |
| | | Low | 850 r.p.m. | 850 r.p.m. | 880 r.p.m. |
| | | Quiet | 680 r.p.m. | 680 r.p.m. | 680 r.p.m. |
| | Heating | High | 1,050 r.p.m. | 1,100 r.p.m. | 1,200 r.p.m. |
| | | Medium | 950 r.p.m. | 980 r.p.m. | 1,050 r.p.m. |
| | | Low | 850 r.p.m. | 850 r.p.m. | 910 r.p.m. |
| | | Quiet | 710 r.p.m. | 710 r.p.m. | 710 r.p.m. |
| AIR FLOW | Cooling | High | 560 $m^3/h$ | 600 $m^3/h$ | 660 $m^3/h$ |
| | | Medium | 500 $m^3/h$ | 520 $m^3/h$ | 560 $m^3/h$ |
| | | Low | 430 $m^3/h$ | 430 $m^3/h$ | 450 $m^3/h$ |
| | | Quiet | 310 $m^3/h$ | 310 $m^3/h$ | 310 $m^3/h$ |
| | Heating | High | 560 $m^3/h$ | 600 $m^3/h$ | 660 $m^3/h$ |
| | | Medium | 500 $m^3/h$ | 520 $m^3/h$ | 560 $m^3/h$ |
| | | Low | 430 $m^3/h$ | 430 $m^3/h$ | 470 $m^3/h$ |
| | | Quiet | 330 $m^3/h$ | 330 $m^3/h$ | 330 $m^3/h$ |
| NOISE LEVEL | Cooling | High | 36 dB(A) | 37 dB(A) | 40 dB(A) |
| | | Medium | 32 dB(A) | 33 dB(A) | 36 dB(A) |
| | | Low | 29 dB(A) | 29 dB(A) | 30 dB(A) |
| | | Quiet | 21 dB(A) | 21 dB(A) | 21 dB(A) |
| | Heating | High | 36 dB(A) | 37 dB(A) | 40 dB(A) |
| | | Medium | 32 dB(A) | 33 dB(A) | 36 dB(A) |
| | | Low | 29 dB(A) | 29 dB(A) | 31 dB(A) |
| | | Quiet | 22 dB(A) | 22 dB(A) | 22 dB(A) |

## MEASUREMENTS

| DIMENSIONS | H x W x D | 280 x 790 x 203 mm |
|---|---|---|
| WEIGHT | Net / Shipping | 8.0 kg / 10.5 kg |

INDOOR UNIT
COMPACT WALL MOUNTED

## ELECTRICAL DATA

| MODEL NAME | ASYG07LUCA | ASYG09LUCA | ASYG12LUCA |
|---|---|---|---|
| CAPACITY | 2.0 kW class | 2.5 kW class | 3.5 kW class |

## FAN MOTOR

| DISCRIMINATION | | | MFD-12TYL | | |
|---|---|---|---|---|---|
| FAN SPEED | Cooling | High | 980 r.p.m. | 1,030 r.p.m. | 1,110 r.p.m. |
| | | Medium | 910 r.p.m. | 950 r.p.m. | 1,030 r.p.m. |
| | | Low | 850 r.p.m. | 850 r.p.m. | 930 r.p.m. |
| | | Quiet | 650 r.p.m. | 650 r.p.m. | 650 r.p.m. |
| | Heating | High | 980 r.p.m. | 1,030 r.p.m. | 1,110 r.p.m. |
| | | Medium | 910 r.p.m. | 950 r.p.m. | 1,030 r.p.m. |
| | | Low | 850 r.p.m. | 850 r.p.m. | 930 r.p.m. |
| | | Quiet | 650 r.p.m. | 650 r.p.m. | 650 r.p.m. |
| AIR FLOW | Cooling | High | 570 $m^3/h$ | 600 $m^3/h$ | 660 $m^3/h$ |
| | | Medium | 520 $m^3/h$ | 550 $m^3/h$ | 600 $m^3/h$ |
| | | Low | 470 $m^3/h$ | 470 $m^3/h$ | 530 $m^3/h$ |
| | | Quiet | 330 $m^3/h$ | 330 $m^3/h$ | 390 $m^3/h$ |
| | Heating | High | 570 $m^3/h$ | 600 $m^3/h$ | 660 $m^3/h$ |
| | | Medium | 520 $m^3/h$ | 550 $m^3/h$ | 600 $m^3/h$ |
| | | Low | 470 $m^3/h$ | 470 $m^3/h$ | 530 $m^3/h$ |
| | | Quiet | 330 $m^3/h$ | 330 $m^3/h$ | 330 $m^3/h$ |
| NOISE LEVEL | Cooling | High | 35 dB(A) | 36 dB(A) | 37 dB(A) |
| | | Medium | 30 dB(A) | 32 dB(A) | 34 dB(A) |
| | | Low | 28 dB(A) | 28 dB(A) | 31 dB(A) |
| | | Quiet | 21 dB(A) | 21 dB(A) | 21 dB(A) |
| | Heating | High | 35 dB(A) | 36 dB(A) | 37 dB(A) |
| | | Medium | 30 dB(A) | 32 dB(A) | 34 dB(A) |
| | | Low | 28 dB(A) | 28 dB(A) | 31 dB(A) |
| | | Quiet | 21 dB(A) | 21 dB(A) | 21 dB(A) |

## MEASUREMENTS

| DIMENSIONS | H x W x D | 282 x 870 x 185 mm |
|---|---|---|
| WEIGHT | Net / Shipping | 9.5 kg / 12.0 kg |

INDOOR UNIT
WALL MOUNTED

## ELECTRICAL DATA

| MODEL NAME | ASAG18LFCA | ASAG24LFCA |
|---|---|---|
| CAPACITY | 5.0 kW class | 7.0 kW class |

## FAN MOTOR

| DISCRIMINATION | | | MFD-50RON | |
|---|---|---|---|---|
| FAN SPEED | Cooling | High | 1,220 r.p.m. | 1,480 r.p.m. |
| | | Medium | 1,020 r.p.m. | 1,220 r.p.m. |
| | | Low | 900 r.p.m. | 1,020 r.p.m. |
| | | Quiet | 710 r.p.m. | 900 r.p.m. |
| | Heating | High | 1,220 r.p.m. | 1,430 r.p.m. |
| | | Medium | 1,020 r.p.m. | 1,220 r.p.m. |
| | | Low | 900 r.p.m. | 1,020 r.p.m. |
| | | Quiet | 710 r.p.m. | 900 r.p.m. |
| AIR FLOW | Cooling | High | 900 $m^3$/h | 1,120 $m^3$/h |
| | | Medium | 740 $m^3$/h | 900 $m^3$/h |
| | | Low | 620 $m^3$/h | 740 $m^3$/h |
| | | Quiet | 550 $m^3$/h | 620 $m^3$/h |
| | Heating | High | 900 $m^3$/h | 1100 $m^3$/h |
| | | Medium | 740 $m^3$/h | 900 $m^3$/h |
| | | Low | 620 $m^3$/h | 740 $m^3$/h |
| | | Quiet | 550 $m^3$/h | 620 $m^3$/h |
| NOISE LEVEL | Cooling | High | 43 dB(A) | 49 dB(A) |
| | | Medium | 37 dB(A) | 42 dB(A) |
| | | Low | 33 dB(A) | 37 dB(A) |
| | | Quiet | 26 dB(A) | 33 dB(A) |
| | Heating | High | 42 dB(A) | 48 dB(A) |
| | | Medium | 37 dB(A) | 42 dB(A) |
| | | Low | 33 dB(A) | 37 dB(A) |
| | | Quiet | 25 dB(A) | 33 dB(A) |

## MEASUREMENTS

| DIMENSIONS | H x W x D | 320 x 998 x 238 mm |
|---|---|---|
| WEIGHT | Net / Shipping | 14 kg / 18 kg |

INDOOR UNIT
COMPACT CASSETTE

## ELECTRICAL DATA

| MODEL NAME | AUAG09LVLA | AUAG12LVLA | AUAG14LVLA | AUAG18LVLA |
|---|---|---|---|---|
| CAPACITY | 2.5 kW class | 3.5 kW class | 4.0 kW class | 5.0 kW class |

## FAN MOTOR

| DISCRIMINATION | | | MFF-24RVL | | | |
|---|---|---|---|---|---|---|
| FAN SPEED | Cooling | High | 590 r.p.m. | 660 r.p.m. | 730 r.p.m. | 790 r.p.m. |
| | | Medium | 540 r.p.m. | 580 r.p.m. | 630 r.p.m. | 660 r.p.m. |
| | | Low | 490 r.p.m. | 520 r.p.m. | 540 r.p.m. | 570 r.p.m. |
| | | Quiet | 440 r.p.m. | 460 r.p.m. | 460 r.p.m. | 460 r.p.m. |
| | Heating | High | 590 r.p.m. | 650 r.p.m. | 740 r.p.m. | 840 r.p.m. |
| | | Medium | 540 r.p.m. | 580 r.p.m. | 670 r.p.m. | 750 r.p.m. |
| | | Low | 490 r.p.m. | 520 r.p.m. | 600 r.p.m. | 650 r.p.m. |
| | | Quiet | 440 r.p.m. | 460 r.p.m. | 480 r.p.m. | 500 r.p.m. |
| AIR FLOW | Cooling | High | 540 $m^3/h$ | 610 $m^3/h$ | 680 $m^3/h$ | 750 $m^3/h$ |
| | | Medium | 490 $m^3/h$ | 530 $m^3/h$ | 580 $m^3/h$ | 610 $m^3/h$ |
| | | Low | 440 $m^3/h$ | 470 $m^3/h$ | 490 $m^3/h$ | 520 $m^3/h$ |
| | | Quiet | 390 $m^3/h$ | 410 $m^3/h$ | 410 $m^3/h$ | 410 $m^3/h$ |
| | Heating | High | 540 $m^3/h$ | 610 $m^3/h$ | 700 $m^3/h$ | 800 $m^3/h$ |
| | | Medium | 490 $m^3/h$ | 530 $m^3/h$ | 620 $m^3/h$ | 710 $m^3/h$ |
| | | Low | 440 $m^3/h$ | 470 $m^3/h$ | 550 $m^3/h$ | 600 $m^3/h$ |
| | | Quiet | 390 $m^3/h$ | 410 $m^3/h$ | 430 $m^3/h$ | 450 $m^3/h$ |
| NOISE LEVEL | Cooling | High | 33 dB(A) | 37 dB(A) | 40 dB(A) | 42 dB(A) |
| | | Medium | 31 dB(A) | 33 dB(A) | 35 dB(A) | 37 dB(A) |
| | | Low | 29 dB(A) | 31 dB(A) | 32 dB(A) | 33 dB(A) |
| | | Quiet | 27 dB(A) | 28 dB(A) | 29 dB(A) | 29 dB(A) |
| | Heating | High | 34 dB(A) | 37 dB(A) | 40 dB(A) | 44 dB(A) |
| | | Medium | 32 dB(A) | 33 dB(A) | 37 dB(A) | 40 dB(A) |
| | | Low | 29 dB(A) | 31 dB(A) | 34 dB(A) | 37 dB(A) |
| | | Quiet | 27 dB(A) | 28 dB(A) | 29 dB(A) | 30 dB(A) |

## MEASUREMENTS

| | | |
|---|---|---|
| DIMENSIONS | H x W x D | 245 x 570 x 570 mm |
| WEIGHT | Net / Shipping | 15 kg / 18 kg |

## PANEL

## MEASUREMENTS

| | | |
|---|---|---|
| MODEL NAME | | UTG-UFYD-W |
| DIMENSIONS | H x W x D | 49 x 700 x 700 mm |
| WEIGHT | Net / Shipping | 2.6 kg / 4.5 kg |

INDOOR UNIT
SLIM DUCT

## ELECTRICAL DATA

| MODEL NAME | ARAG09LLLA | ARAG12LLLA | ARAG14LLLA |
|---|---|---|---|
| CAPACITY | 2.5 kW class | 3.5 kW class | 4.0 kW class |

## FAN MOTOR

| DISCRIMINATION | | | MFG-14WVA | | |
|---|---|---|---|---|---|
| FAN SPEED | Cooling | High | 1,260 r.p.m. | 1,340 r.p.m. | 1,560 r.p.m. |
| | | Medium | 1,160 r.p.m. | 1,240 r.p.m. | 1,400 r.p.m. |
| | | Low | 1,060 r.p.m. | 1,140 r.p.m. | 1,240 r.p.m. |
| | | Quiet | 960 r.p.m. | 1,030 r.p.m. | 1,030 r.p.m. |
| | Heating | High | 1,260 r.p.m. | 1,340 r.p.m. | 1,560 r.p.m. |
| | | Medium | 1,160 r.p.m. | 1,240 r.p.m. | 1,400 r.p.m. |
| | | Low | 1,060 r.p.m. | 1,140 r.p.m. | 1,240 r.p.m. |
| | | Quiet | 960 r.p.m. | 1,030 r.p.m. | 1,030 r.p.m. |
| AIR FLOW | Cooling | High | 600 $m^3/h$ | 650 $m^3/h$ | 800 $m^3/h$ |
| | | Medium | 550 $m^3/h$ | 600 $m^3/h$ | 700 $m^3/h$ |
| | | Low | 500 $m^3/h$ | 550 $m^3/h$ | 600 $m^3/h$ |
| | | Quiet | 450 $m^3/h$ | 480 $m^3/h$ | 480 $m^3/h$ |
| | Heating | High | 600 $m^3/h$ | 650 $m^3/h$ | 800 $m^3/h$ |
| | | Medium | 550 $m^3/h$ | 600 $m^3/h$ | 700 $m^3/h$ |
| | | Low | 500 $m^3/h$ | 550 $m^3/h$ | 600 $m^3/h$ |
| | | Quiet | 450 $m^3/h$ | 480 $m^3/h$ | 480 $m^3/h$ |
| NOISE LEVEL | Cooling | High | 28 dB(A) | 29 dB(A) | 32 dB(A) |
| | | Medium | 27 dB(A) | 28 dB(A) | 30 dB(A) |
| | | Low | 26 dB(A) | 27 dB(A) | 28 dB(A) |
| | | Quiet | 25 dB(A) | 26 dB(A) | 26 dB(A) |
| | Heating | High | 28 dB(A) | 29 dB(A) | 33 dB(A) |
| | | Medium | 26 dB(A) | 28 dB(A) | 30 dB(A) |
| | | Low | 25 dB(A) | 27 dB(A) | 28 dB(A) |
| | | Quiet | 24 dB(A) | 24 dB(A) | 25 dB(A) |

## MEASUREMENTS

| DIMENSIONS | H x W x D | 198 x 700 x 620 mm |
|---|---|---|
| WEIGHT | Net / Shipping | 19 kg / 26 kg |

INDOOR UNIT
SLIM DUCT

## ELECTRICAL DATA

| MODEL NAME | ARAG18LLLA | ARAG24LLLA |
|---|---|---|
| CAPACITY | 5.0 kW class | 7.0 kW class |

## FAN MOTOR

| DISCRIMINATION | | | MFG-24WVA | |
|---|---|---|---|---|
| FAN SPEED | Cooling | High | 1,380 r.p.m. | 1,460 r.p.m. |
| | | Medium | 1,300 r.p.m. | 1,360 r.p.m. |
| | | Low | 1,220 r.p.m. | 1,260 r.p.m. |
| | | Quiet | 1,140 r.p.m. | 1,180 r.p.m. |
| | Heating | High | 1,380 r.p.m. | 1,460 r.p.m. |
| | | Medium | 1,300 r.p.m. | 1,360 r.p.m. |
| | | Low | 1,220 r.p.m. | 1,260 r.p.m. |
| | | Quiet | 1,140 r.p.m. | 1,180 r.p.m. |
| AIR FLOW | Cooling | High | 940 $m^3$/h | 1,330 $m^3$/h |
| | | Medium | 880 $m^3$/h | 1,240 $m^3$/h |
| | | Low | 820 $m^3$/h | 1,100 $m^3$/h |
| | | Quiet | 750 $m^3$/h | 1,030 $m^3$/h |
| | Heating | High | 940 $m^3$/h | 1,330 $m^3$/h |
| | | Medium | 880 $m^3$/h | 1,240 $m^3$/h |
| | | Low | 820 $m^3$/h | 1,100 $m^3$/h |
| | | Quiet | 750 $m^3$/h | 1,030 $m^3$/h |
| NOISE LEVEL | Cooling | High | 32 dB(A) | 33 dB(A) |
| | | Medium | 31 dB(A) | 32 dB(A) |
| | | Low | 30 dB(A) | 30 dB(A) |
| | | Quiet | 29 dB(A) | 29 dB(A) |
| | Heating | High | 33 dB(A) | 35 dB(A) |
| | | Medium | 32 dB(A) | 34 dB(A) |
| | | Low | 31 dB(A) | 32 dB(A) |
| | | Quiet | 29 dB(A) | 29 dB(A) |

## MEASUREMENTS

| | | | |
|---|---|---|---|
| DIMENSIONS | H x W x D | 198 x 900 x 620 mm | 198 x 1,100 x 620 mm |
| WEIGHT | Net / Shipping | 23 kg / 30 kg | 27 kg / 34 kg |

# DIMENSIONS

OUTDOOR UNIT

Unit : mm

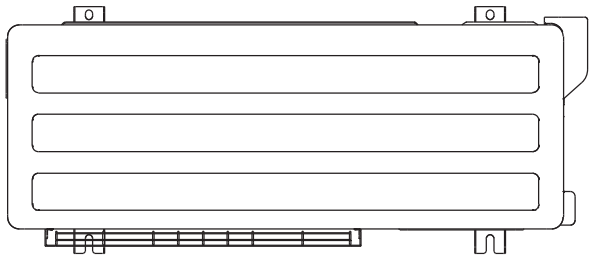

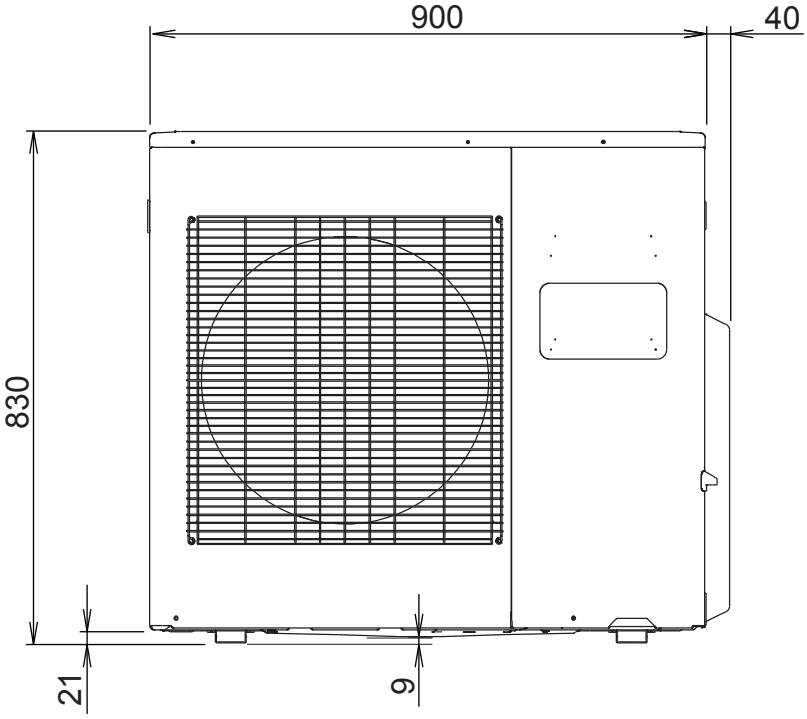


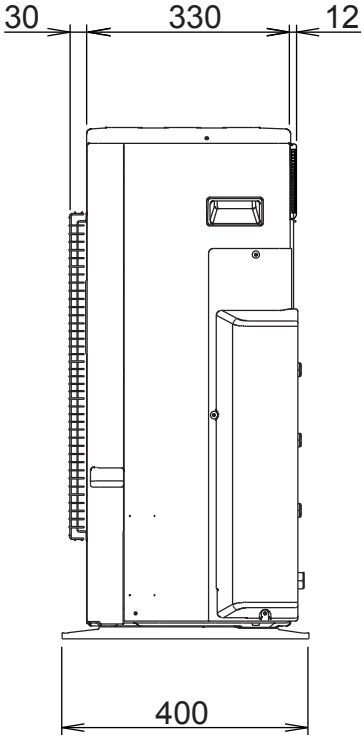


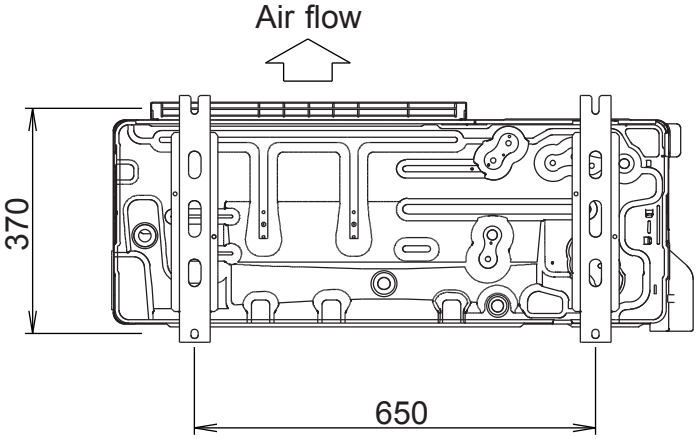

Unit : mm

INDOOR UNIT
COMPACT WALL MOUNTED
ASAG07LJCA, ASAG09LJCA, ASAG12LJCA

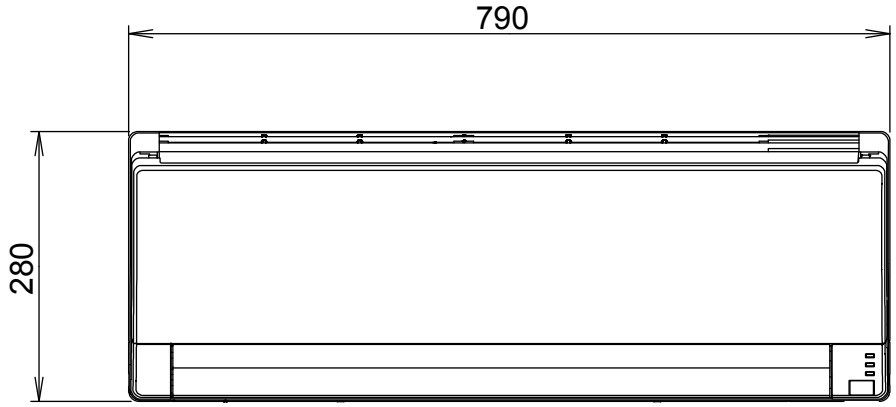


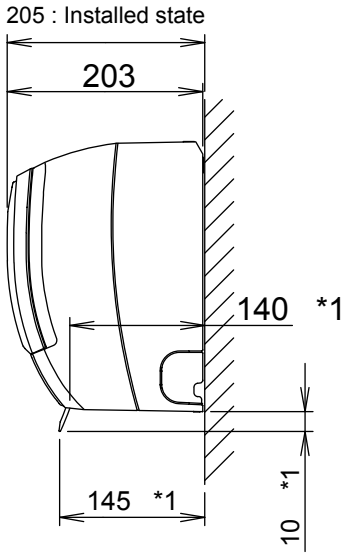


*1: Vertical flap is downward

INDOOR UNIT
COMPACT WALL MOUNTED
ASYG07LUCA, ASYG09LUCA, ASYG12LUCA

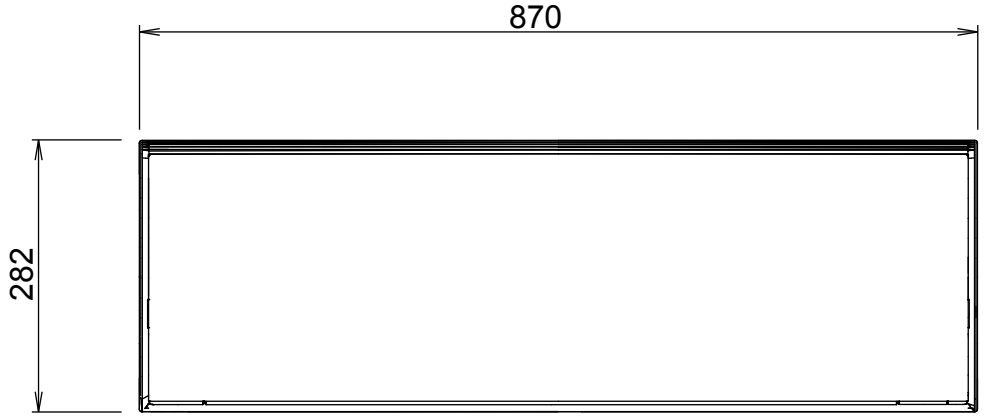


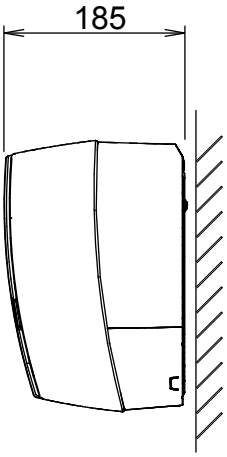


INDOOR UNIT
WALL MOUNTED
ASAG18LFCA, ASAG24LFCA

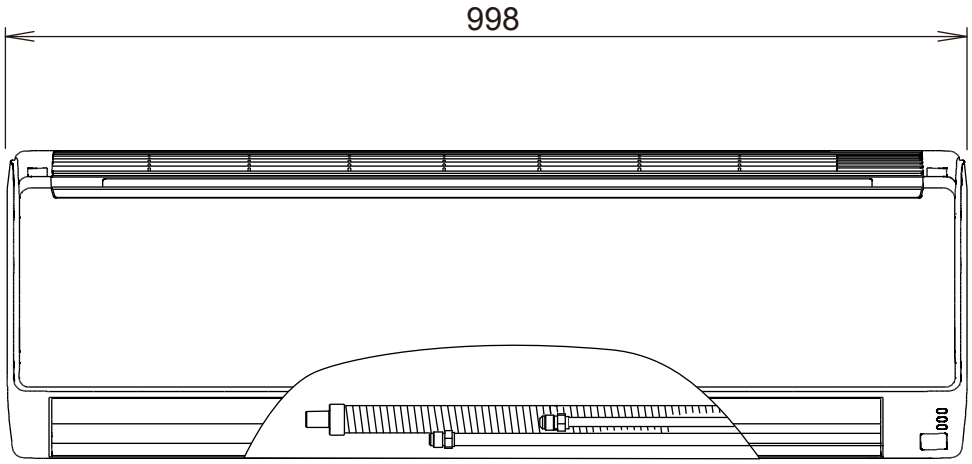


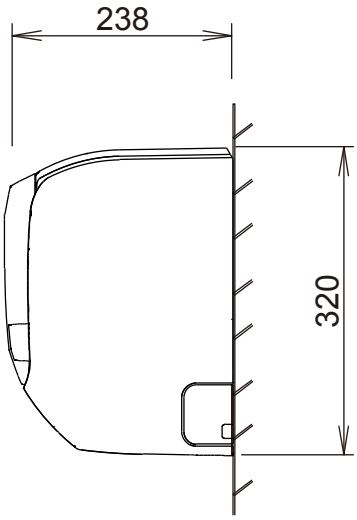

INDOOR UNIT
COMPACT CASSETTE
AUAG09LVLA
AUAG12LVLA
AUAG14LVLA
AUAG18LVLA

Unit : mm

DECORATION PANEL
UTG-UFYD-W

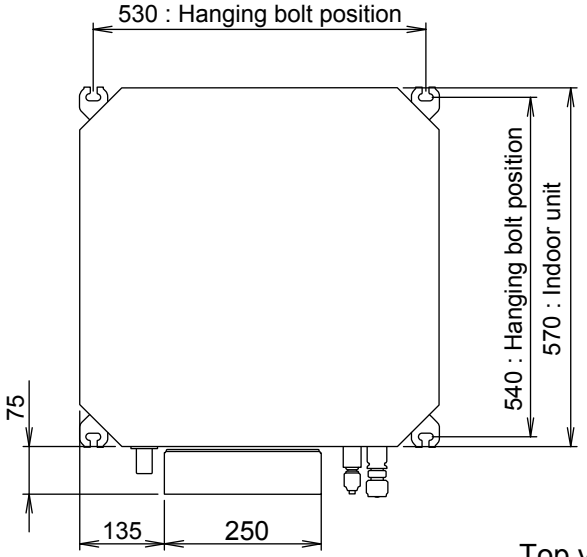


Top view

Decoration panel mounting state

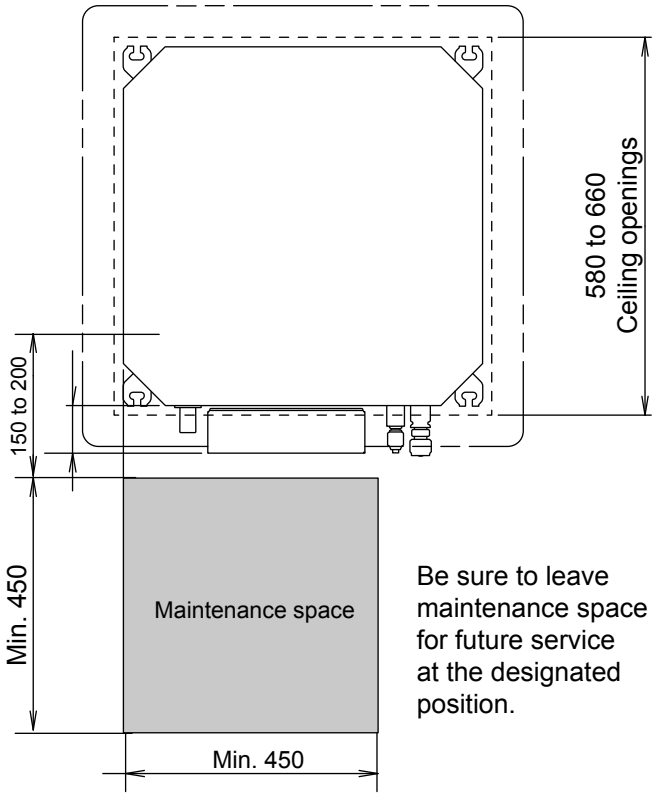


Be sure to leave maintenance space for future service at the designated position.

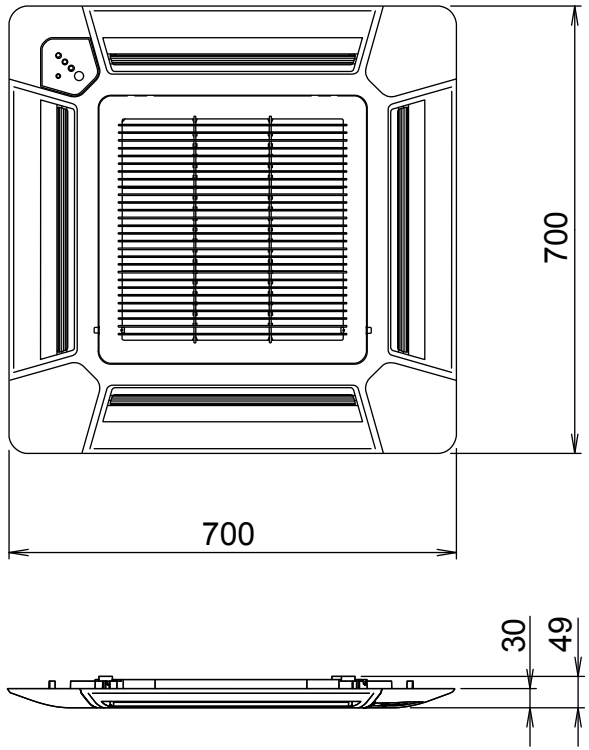


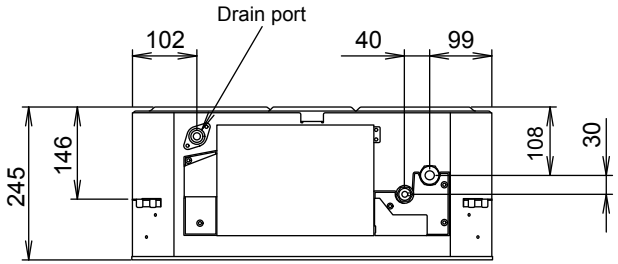


Side view

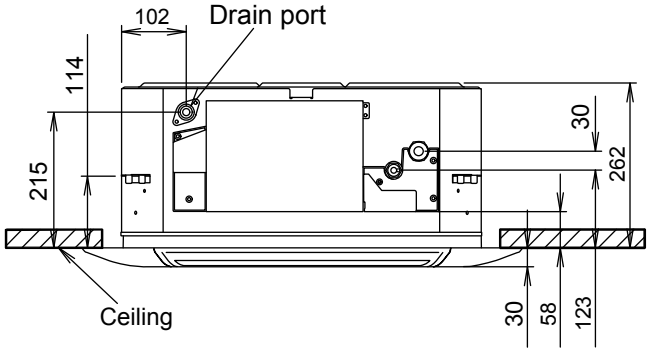

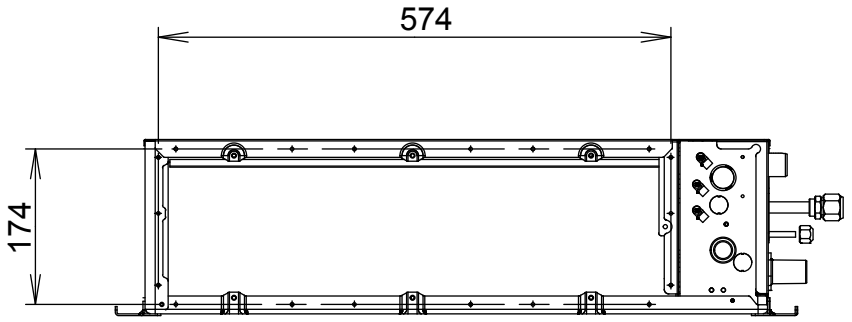


INDOOR UNIT
SLIM DUCT
ARAG09LLLA
ARAG12LLLA
ARAG14LLLA

Unit : mm

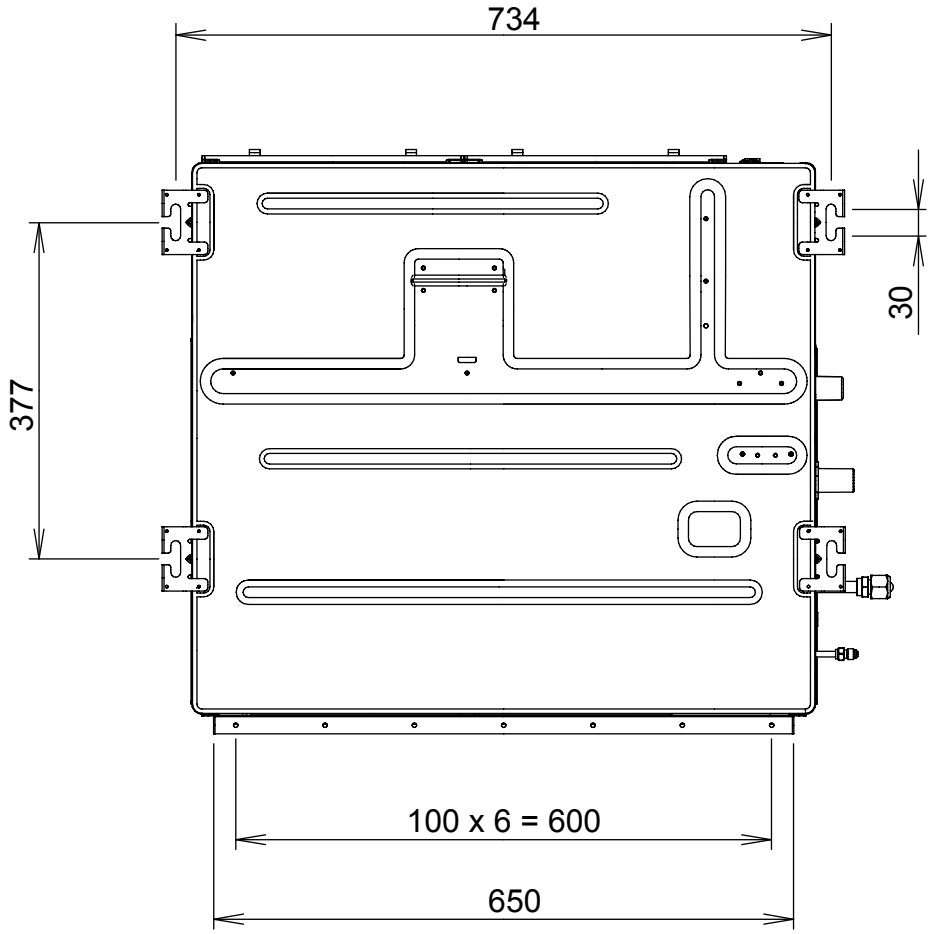


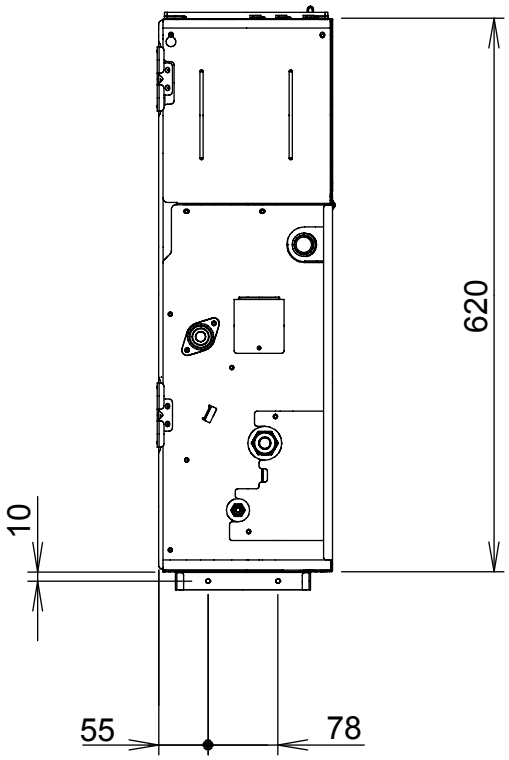


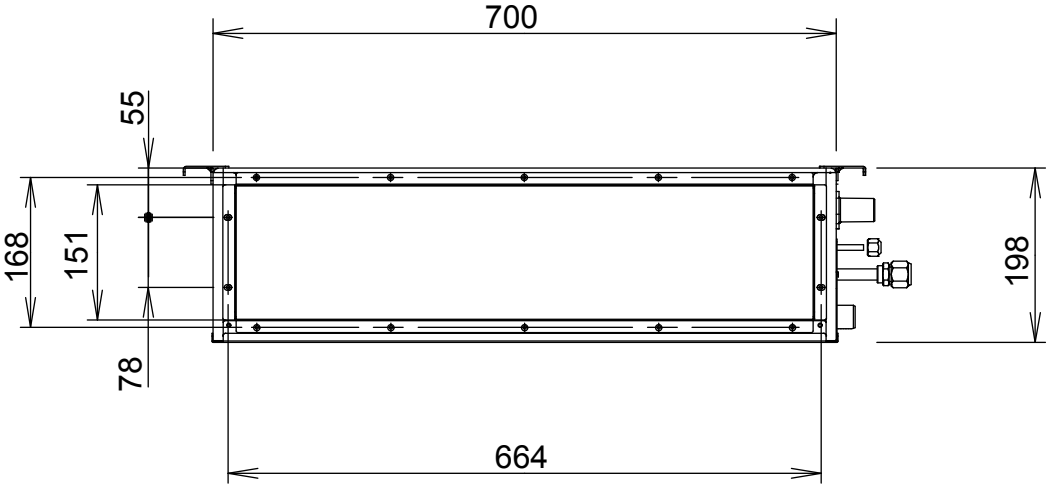

INDOOR UNIT
SLIM DUCT
ARAG18LLLA

Unit : mm

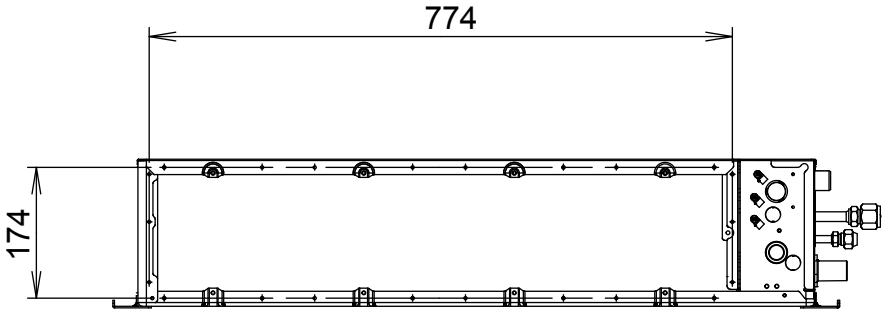


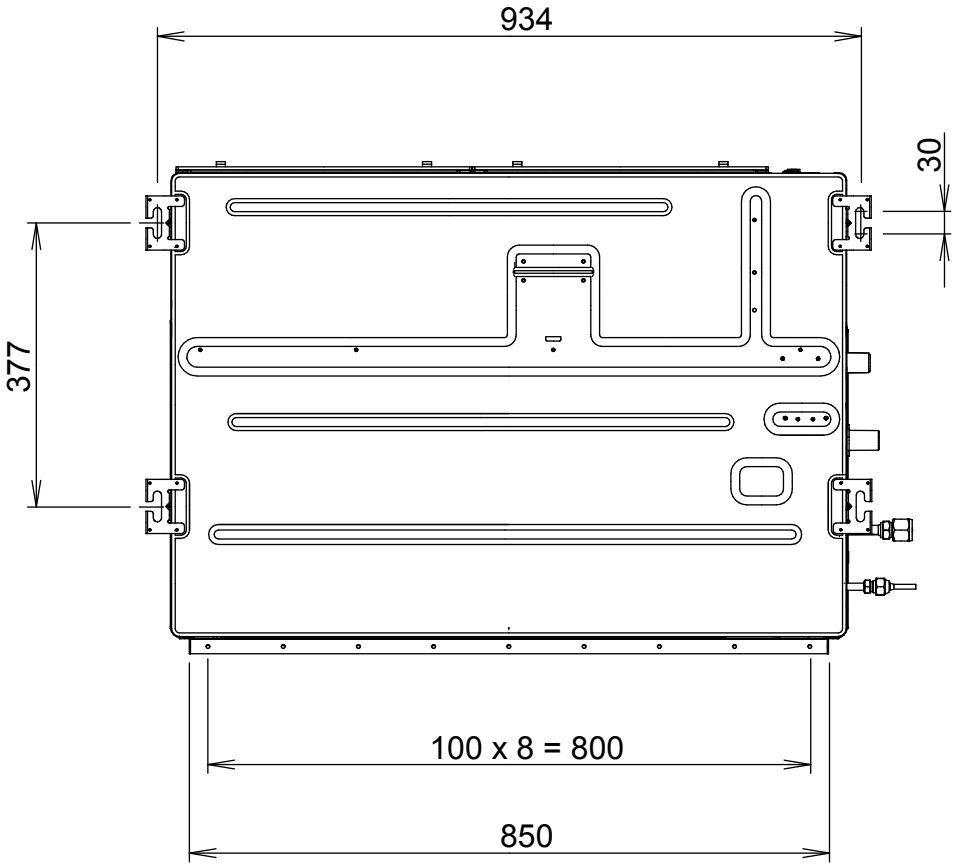


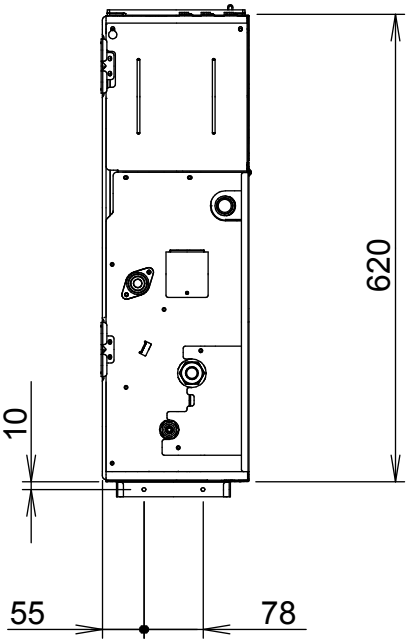


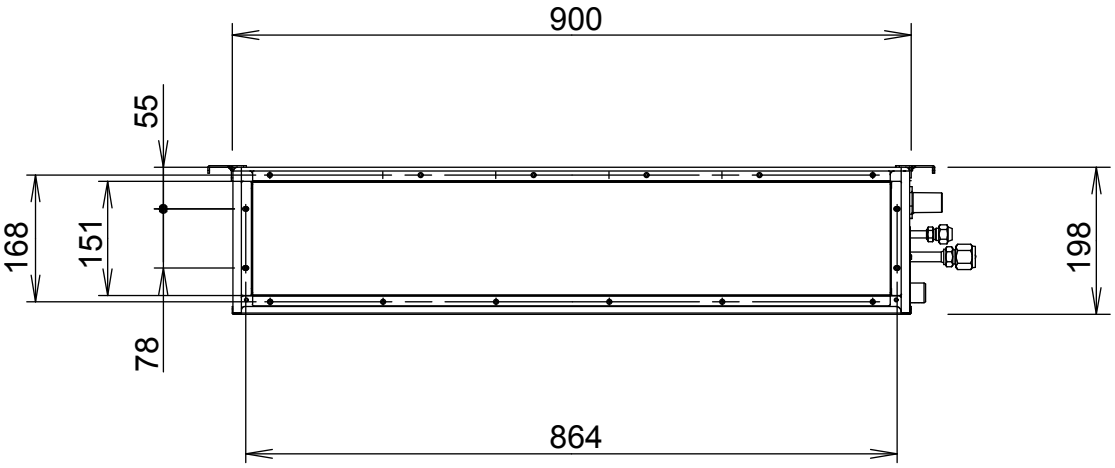

INDOOR UNIT
SLIM DUCT
ARAG24LLLA

Unit : mm

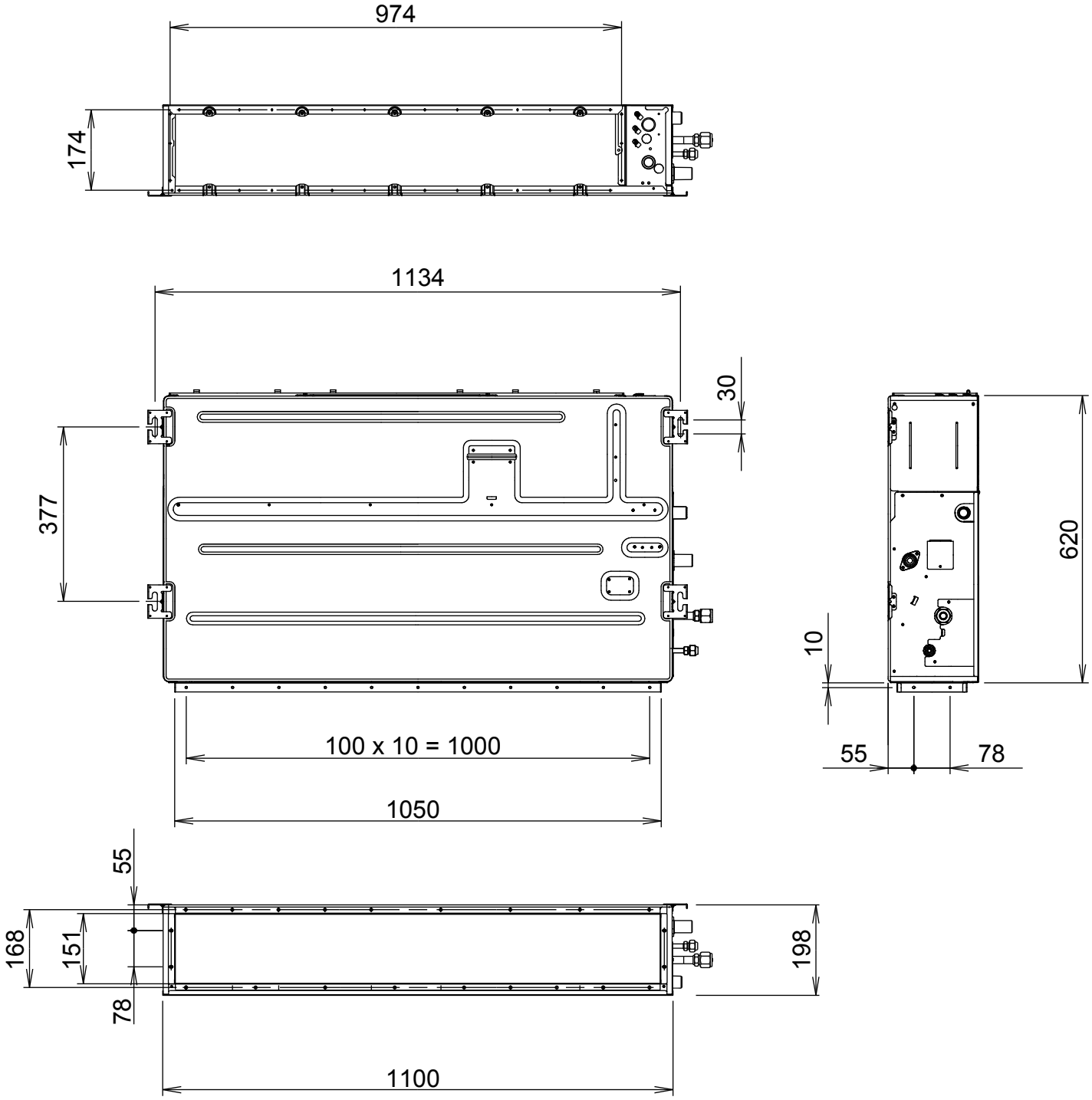

# REFRIGERANT SYSTEM DIAGRAM

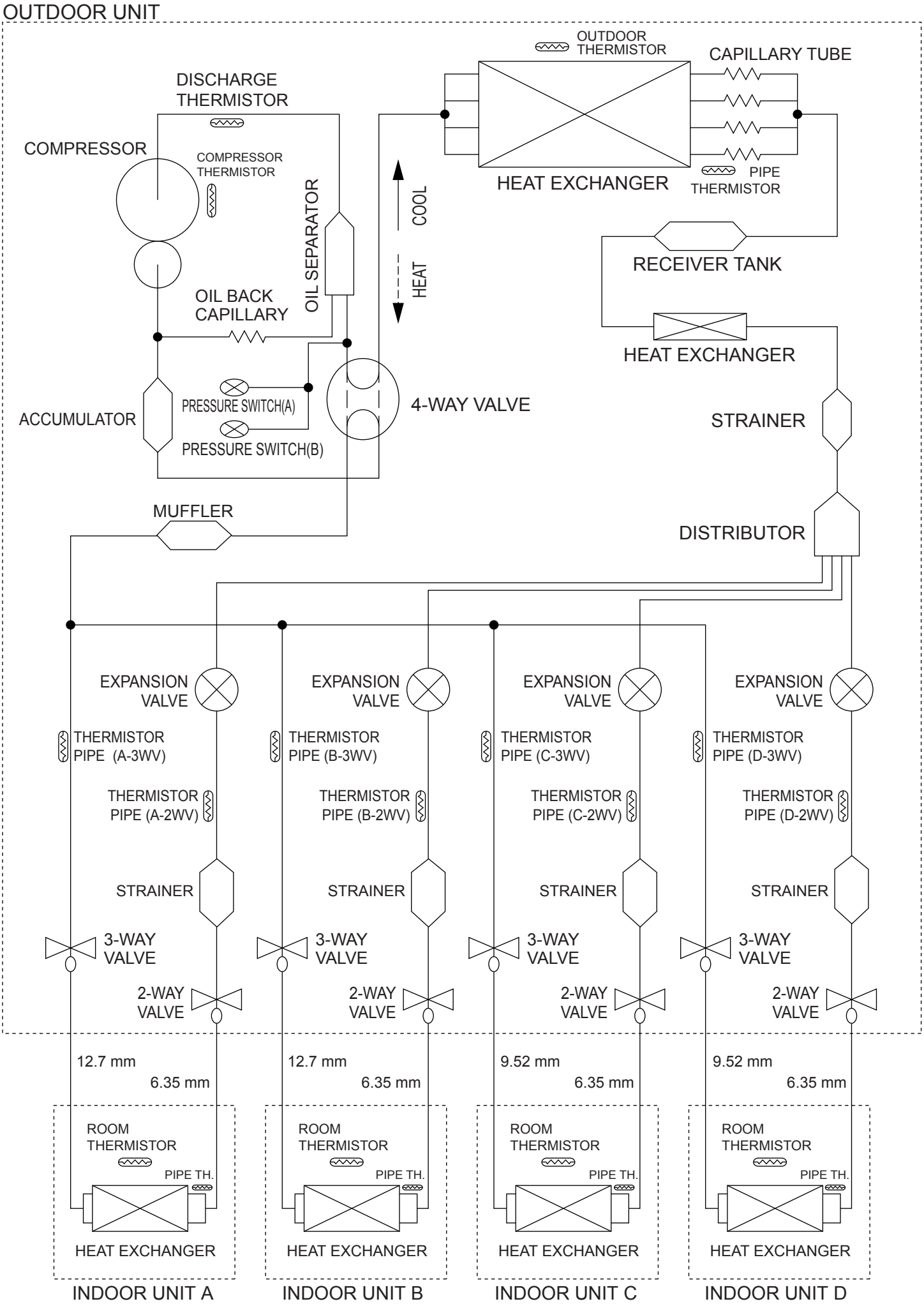

# CIRCUIT DIAGRAM

OUTDOOR UNIT
AOAG30LAT4

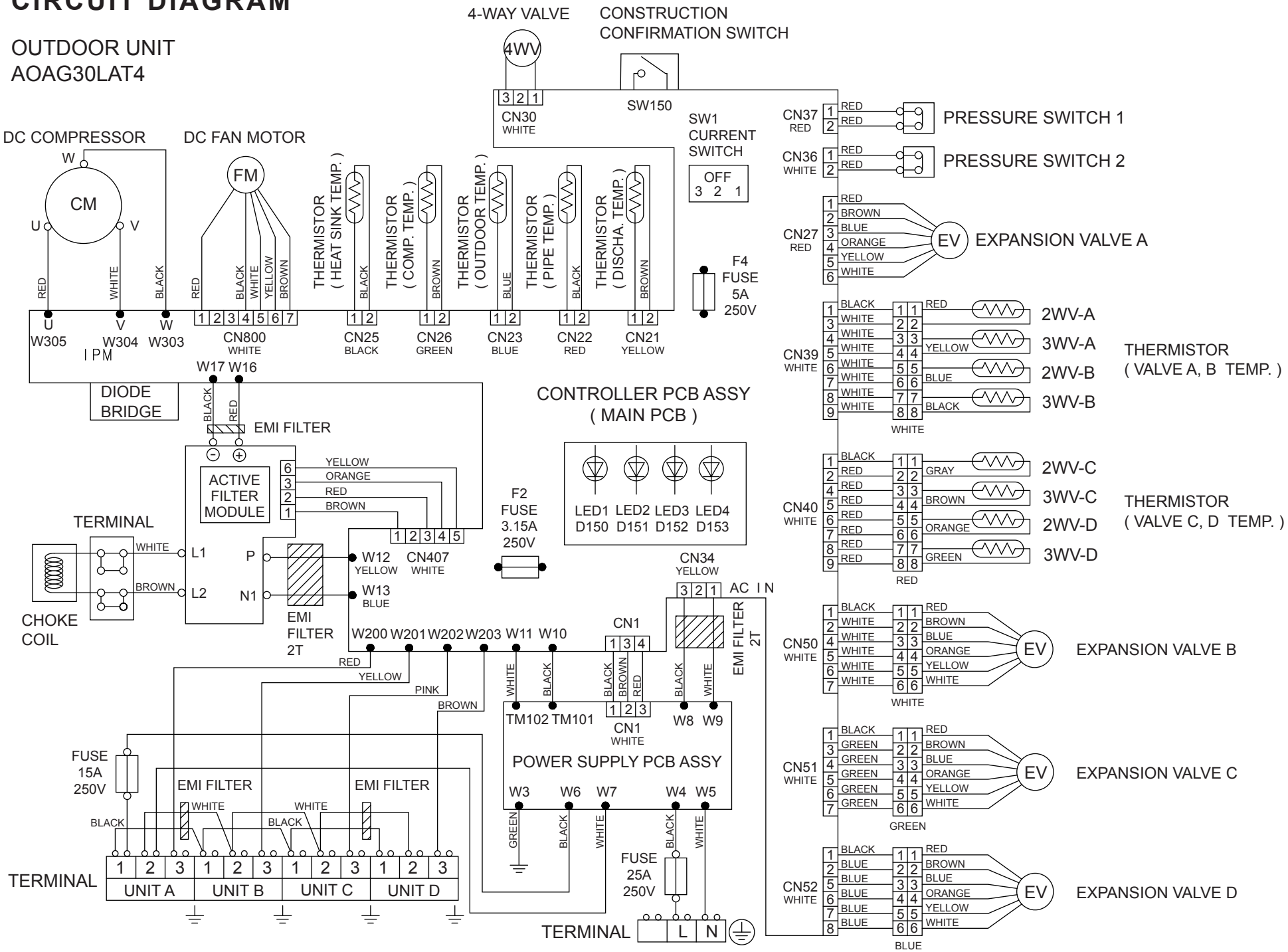

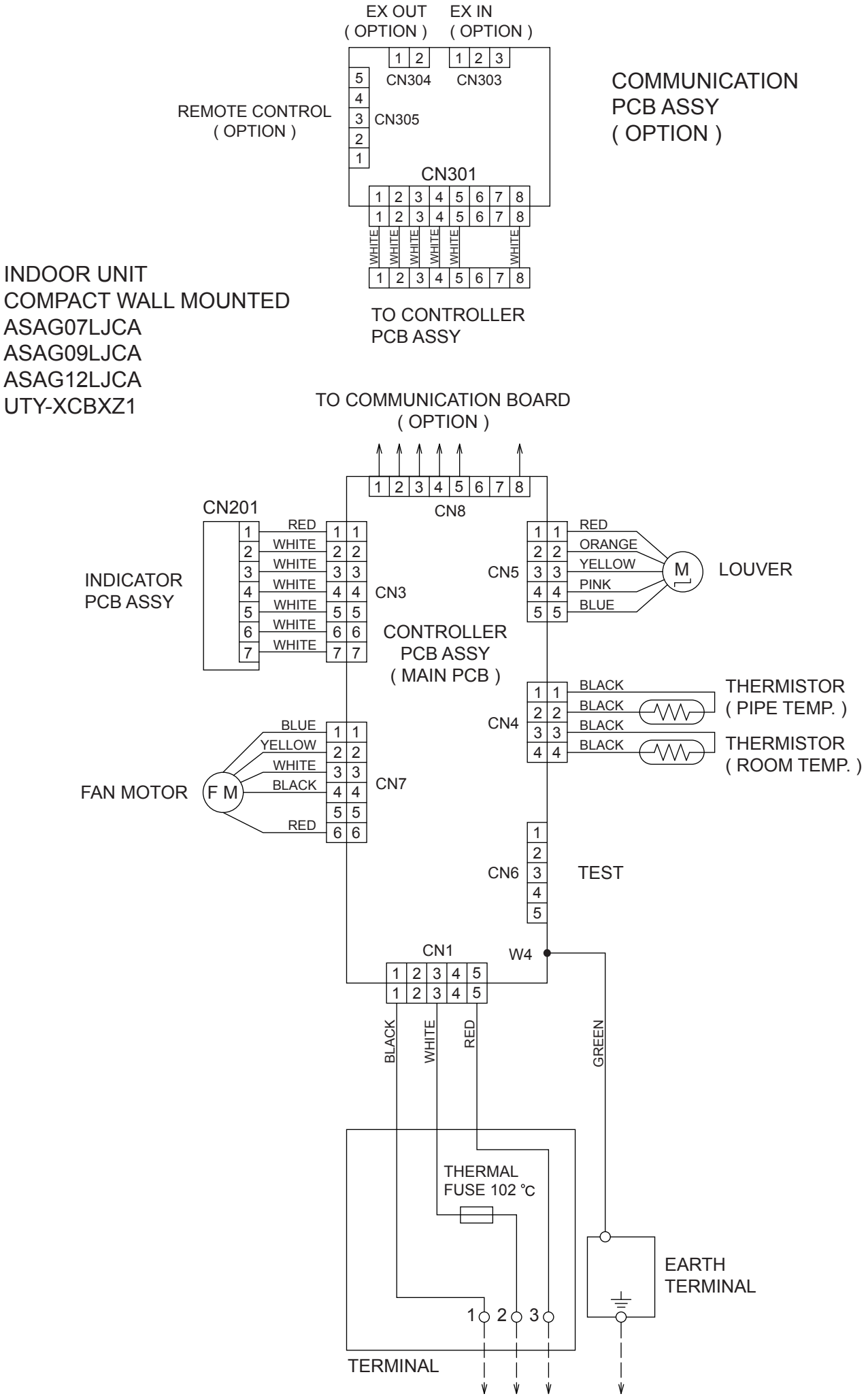
EX OUT
( OPTION )
EX IN
( OPTION )
CN304
CN303
REMOTE CONTROL
( OPTION )
CN305
COMMUNICATION
PCB ASSY
( OPTION )
CN301
WHITE
TO CONTROLLER
PCB ASSY
INDOOR UNIT
COMPACT WALL MOUNTED
ASAG07LJCA
ASAG09LJCA
ASAG12LJCA
UTY-XCBXZ1
TO COMMUNICATION BOARD
( OPTION )
CN8
CN201
RED
WHITE
INDICATOR
PCB ASSY
CN3
CN5
ORANGE
YELLOW
PINK
BLUE
M
LOUVER
CONTROLLER
PCB ASSY
( MAIN PCB )
CN4
BLACK
THERMISTOR
( PIPE TEMP. )
THERMISTOR
( ROOM TEMP. )
BLUE
YELLOW
WHITE
BLACK
RED
FAN MOTOR
F M
CN7
CN6
TEST
CN1
W4
BLACK
WHITE
RED
GREEN
THERMAL
FUSE 102 ℃
EARTH
TERMINAL
TERMINAL

INDOOR UNIT
COMPACT WALL MOUNTED
ASYG07LUCA
ASYG09LUCA
ASYG12LUCA
UTY-TWBXF

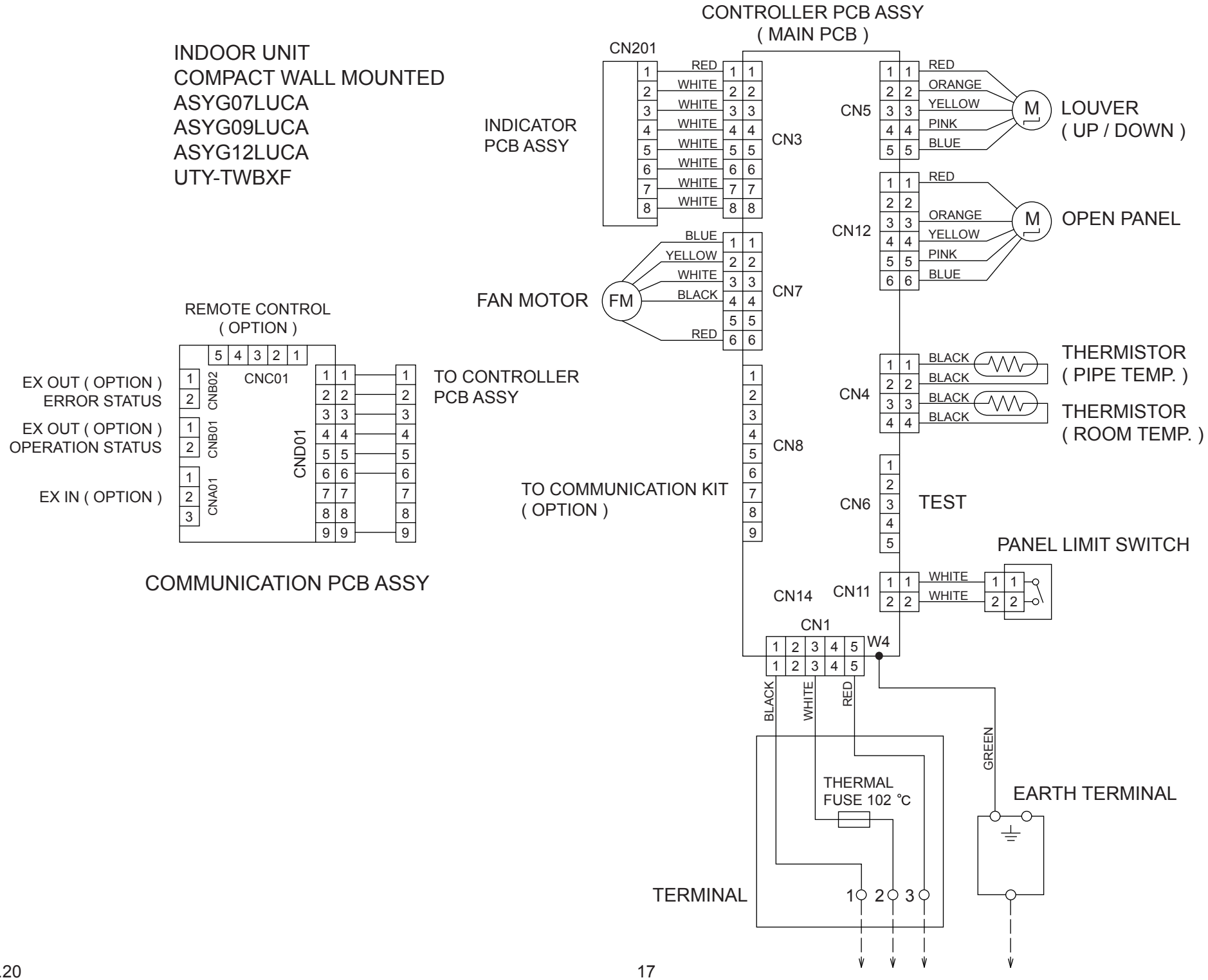

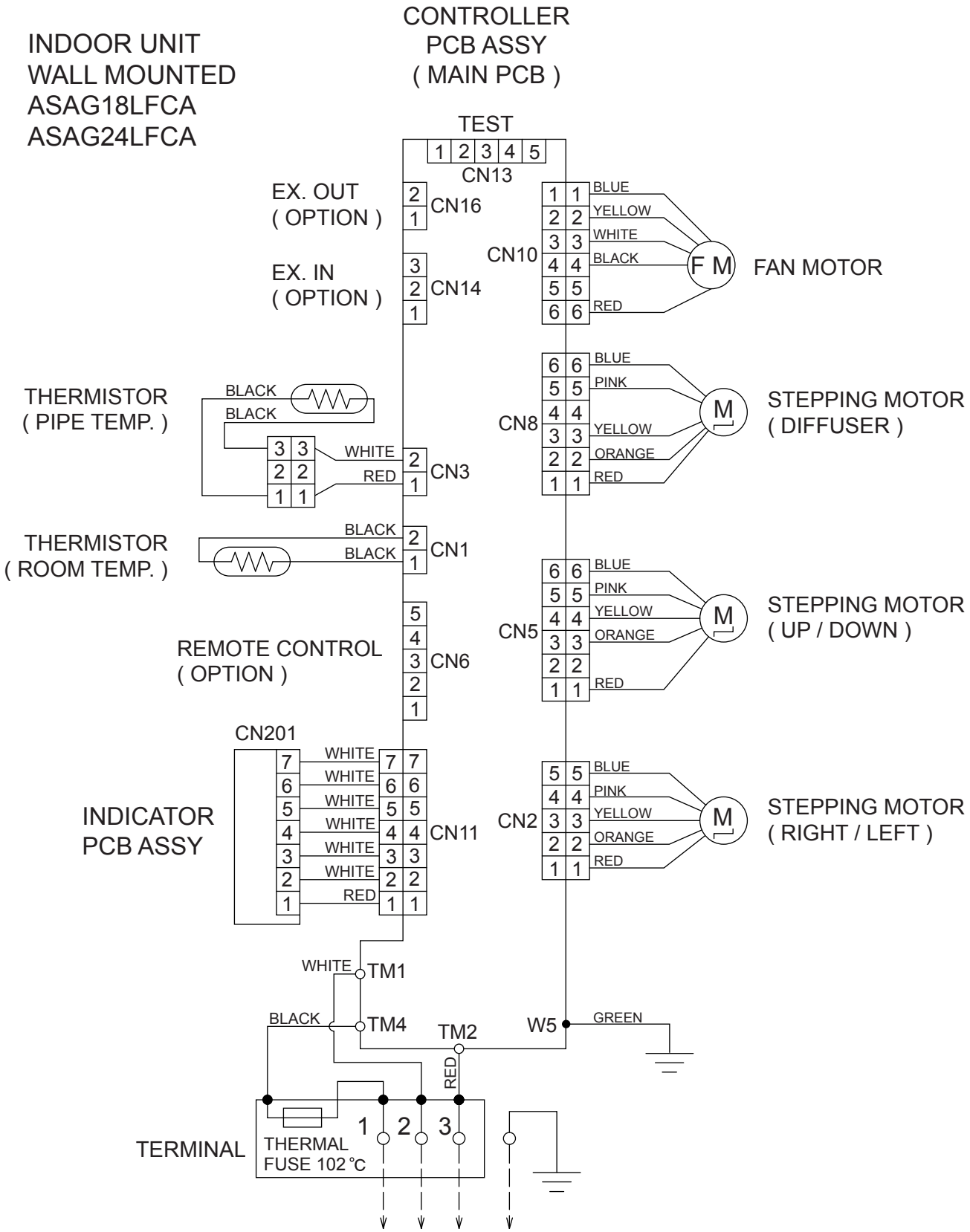
INDOOR UNIT
WALL MOUNTED
ASAG18LFCA
ASAG24LFCA
CONTROLLER
PCB ASSY
( MAIN PCB )
TEST
CN13
EX. OUT
( OPTION )
CN16
EX. IN
( OPTION )
CN14
CN10
BLUE
YELLOW
WHITE
BLACK
RED
F M
FAN MOTOR
THERMISTOR
( PIPE TEMP. )
BLACK
BLACK
WHITE
RED
CN3
CN8
BLUE
PINK
YELLOW
ORANGE
RED
M
STEPPING MOTOR
( DIFFUSER )
THERMISTOR
( ROOM TEMP. )
BLACK
BLACK
CN1
REMOTE CONTROL
( OPTION )
CN6
CN5
BLUE
PINK
YELLOW
ORANGE
RED
M
STEPPING MOTOR
( UP / DOWN )
CN201
INDICATOR
PCB ASSY
WHITE
WHITE
WHITE
WHITE
WHITE
WHITE
RED
CN11
CN2
BLUE
PINK
YELLOW
ORANGE
RED
M
STEPPING MOTOR
( RIGHT / LEFT )
WHITE
TM1
BLACK
TM4
TM2
W5
GREEN
RED
TERMINAL
THERMAL
FUSE 102 ℃
1
2
3

INDOOR UNIT
COMPACT CASSETTE
AUAG09LVLA
AUAG12LVLA
AUAG14LVLA
AUAG18LVLA

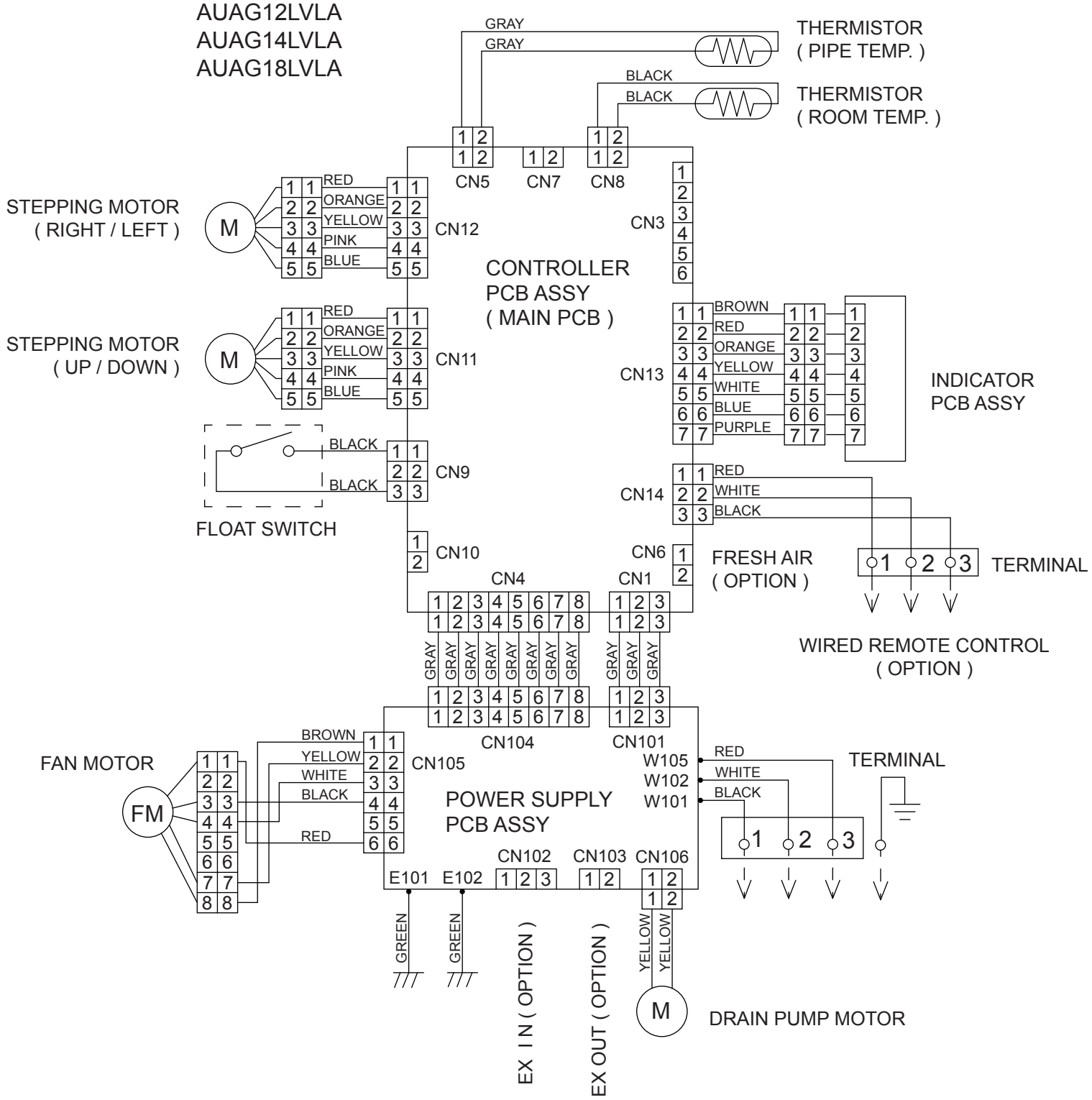

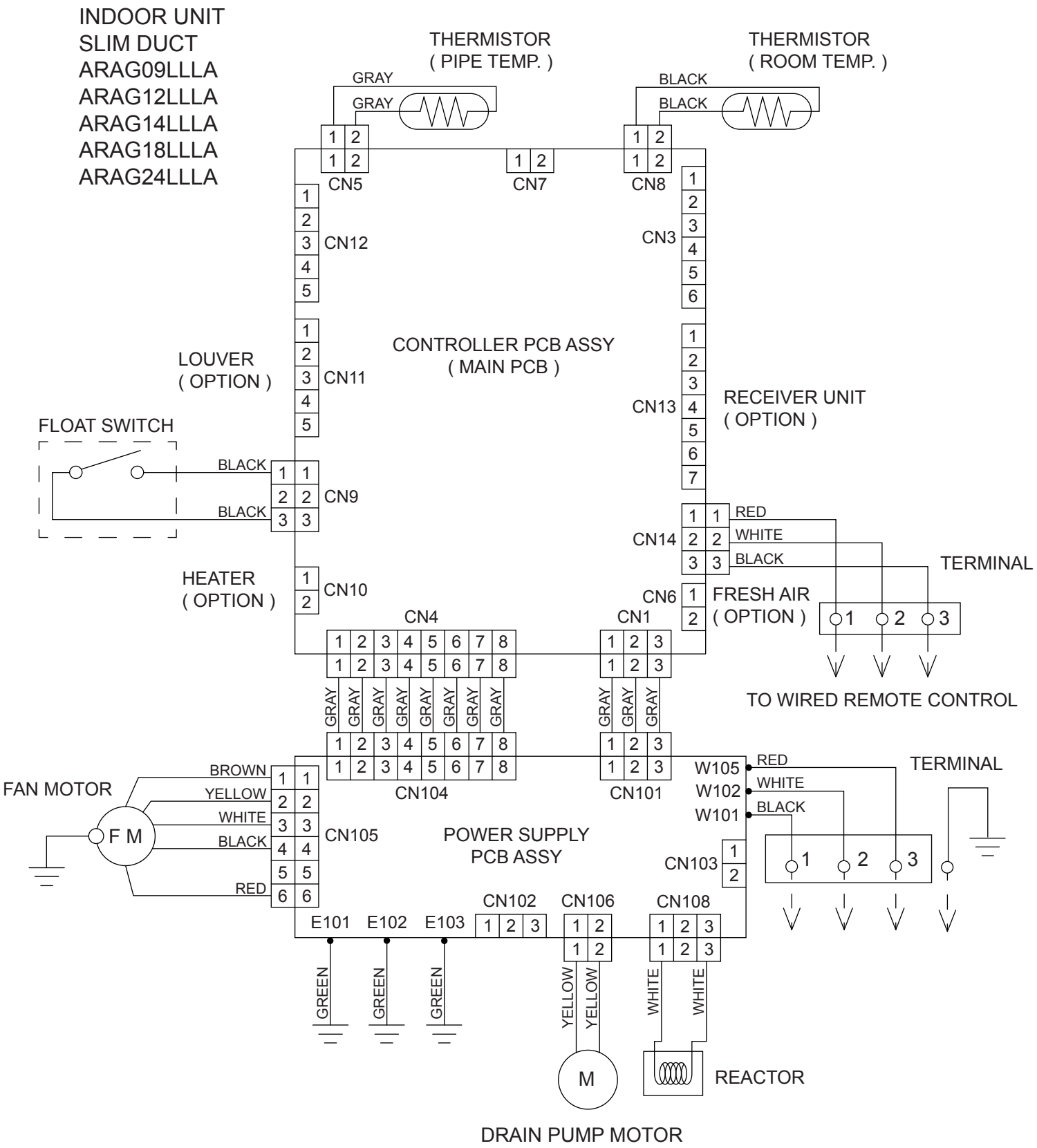
INDOOR UNIT
SLIM DUCT
ARAG09LLLA
ARAG12LLLA
ARAG14LLLA
ARAG18LLLA
ARAG24LLLA
THERMISTOR
( PIPE TEMP. )
THERMISTOR
( ROOM TEMP. )
GRAY
GRAY
BLACK
BLACK
CN5
CN7
CN8
CN12
CN3
CONTROLLER PCB ASSY
( MAIN PCB )
LOUVER
( OPTION )
CN11
CN13
RECEIVER UNIT
( OPTION )
FLOAT SWITCH
BLACK
BLACK
CN9
CN14
RED
WHITE
BLACK
TERMINAL
HEATER
( OPTION )
CN10
CN6
FRESH AIR
( OPTION )
CN4
CN1
TO WIRED REMOTE CONTROL
GRAY
CN104
CN101
W105
W102
W101
RED
WHITE
BLACK
TERMINAL
FAN MOTOR
BROWN
YELLOW
WHITE
BLACK
RED
F M
CN105
POWER SUPPLY
PCB ASSY
CN103
CN102
CN106
CN108
E101
E102
E103
GREEN
YELLOW
WHITE
M
REACTOR
DRAIN PUMP MOTOR

# OUTDOOR PCB CIRCUIT DIAGRAM

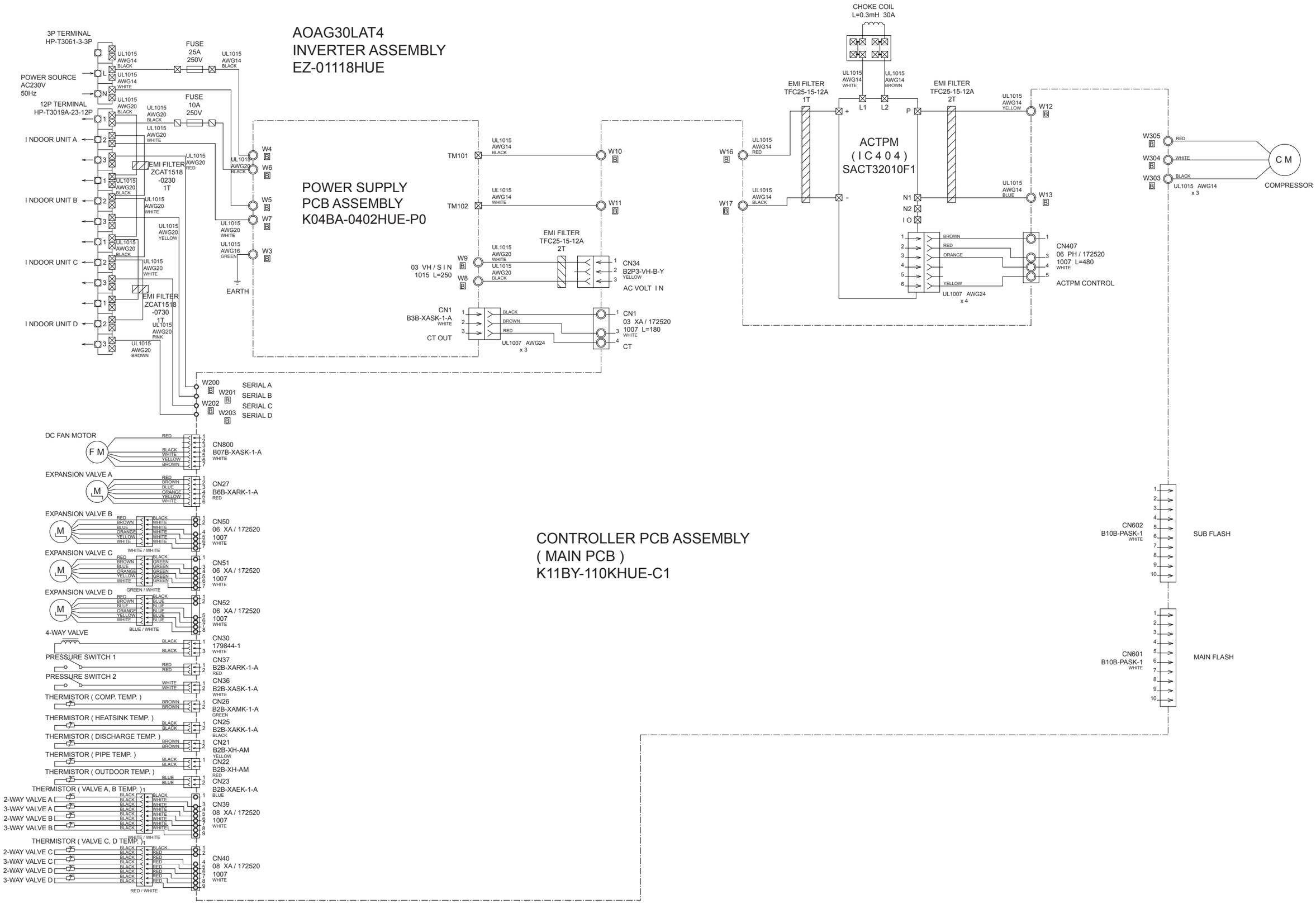

OUTDOOR UNIT
AOAG30LAT4
CONTROLLER PCB ASSEMBLY ( MAIN PCB )
K11BY-110KHUE-C1

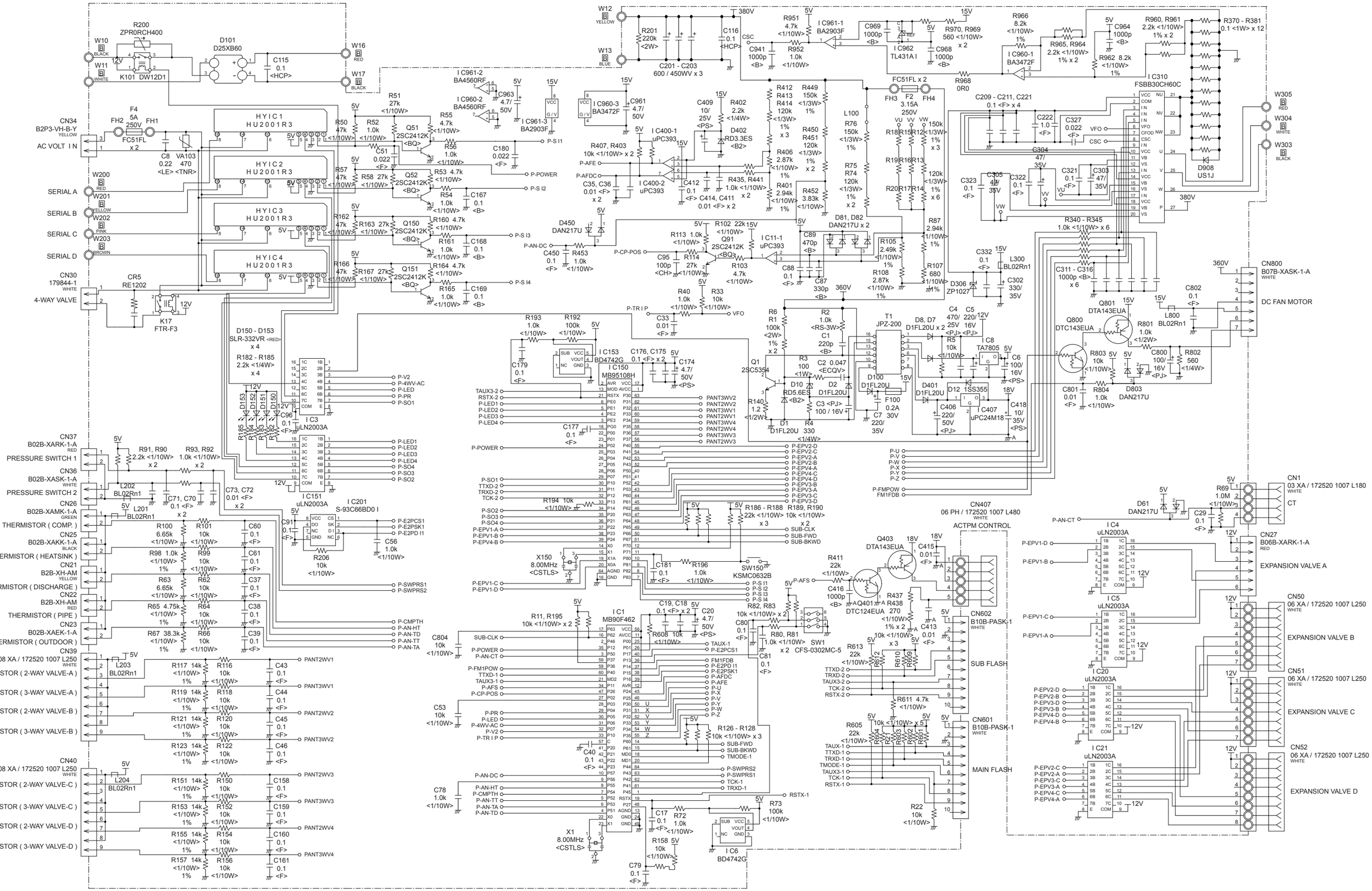

OUTDOOR UNIT
AOAG30LAT4
POWER SUPPLY PCB ASSEMBLY
K04BA-0402HUE-P0

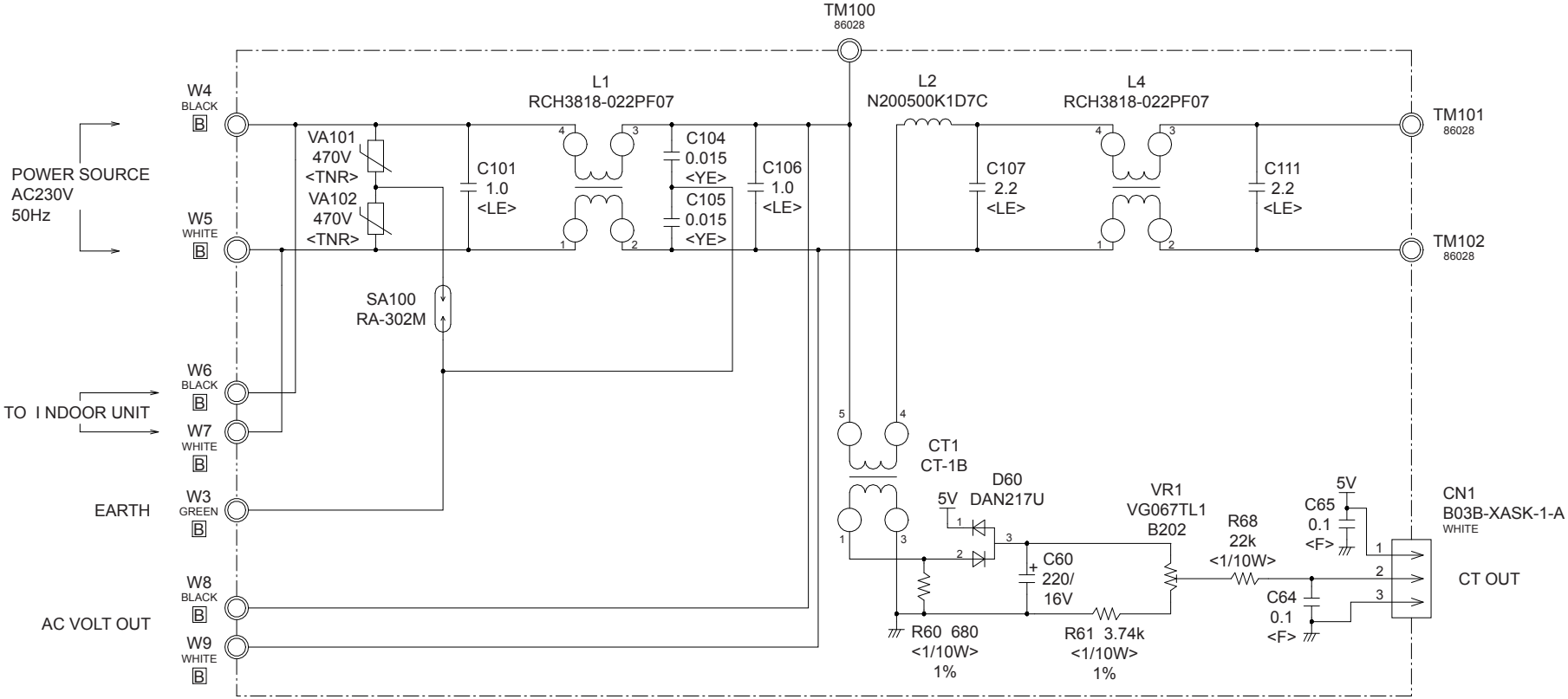

# INDOOR PCB CIRCUIT DIAGRAM

COMPACT WALL MOUNTED
CONTROL UNIT
ASAG07LJCA : EZ-010MHSE
ASAG09LJCA : EZ-010PHSE
ASAG12LJCA : EZ-010RHSE

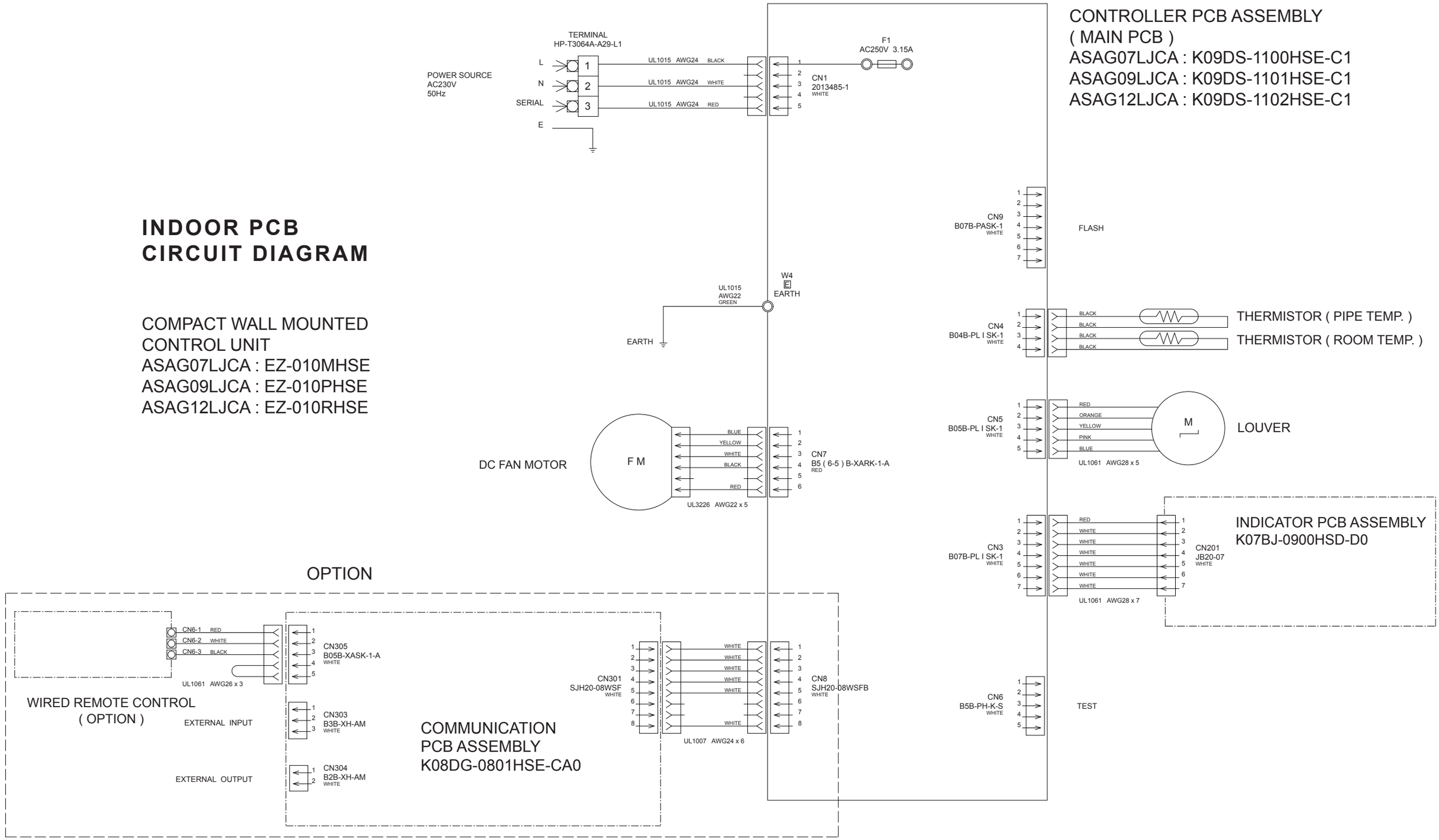

INDOOR UNIT
COMPACT WALL MOUNTED
CONTROLLER PCB ASSEMBLY
( MAIN PCB )
ASAG07LJCA : K09DS-1100HSE-C1
ASAG09LJCA : K09DS-1101HSE-C1
ASAG12LJCA : K09DS-1102HSE-C1

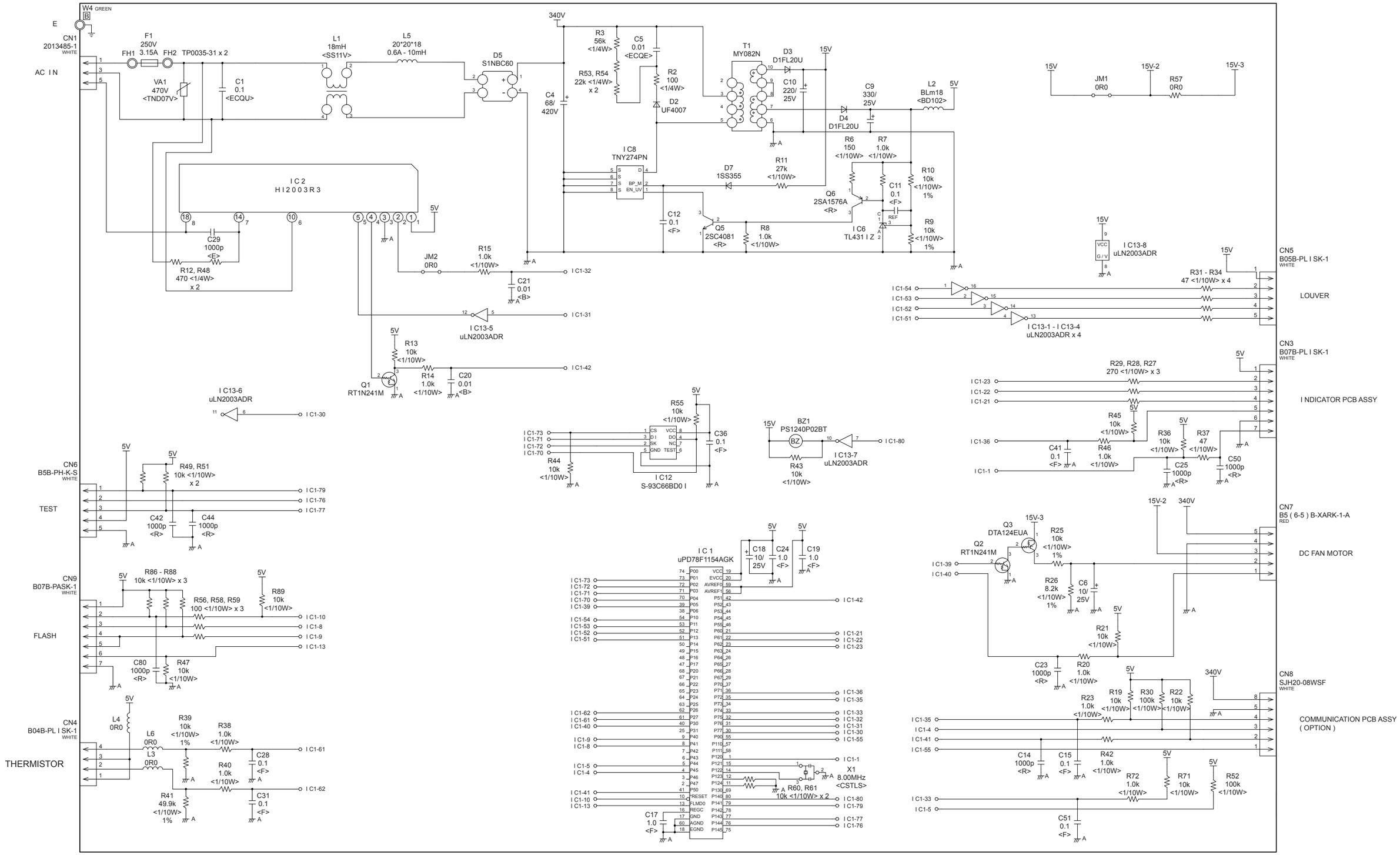

INDOOR UNIT
COMPACT WALL MOUNTED
ASAG07LJCA
ASAG09LJCA
ASAG12LJCA
INDICATOR PCB ASSEMBLY
K07BJ-0900HSD-D0

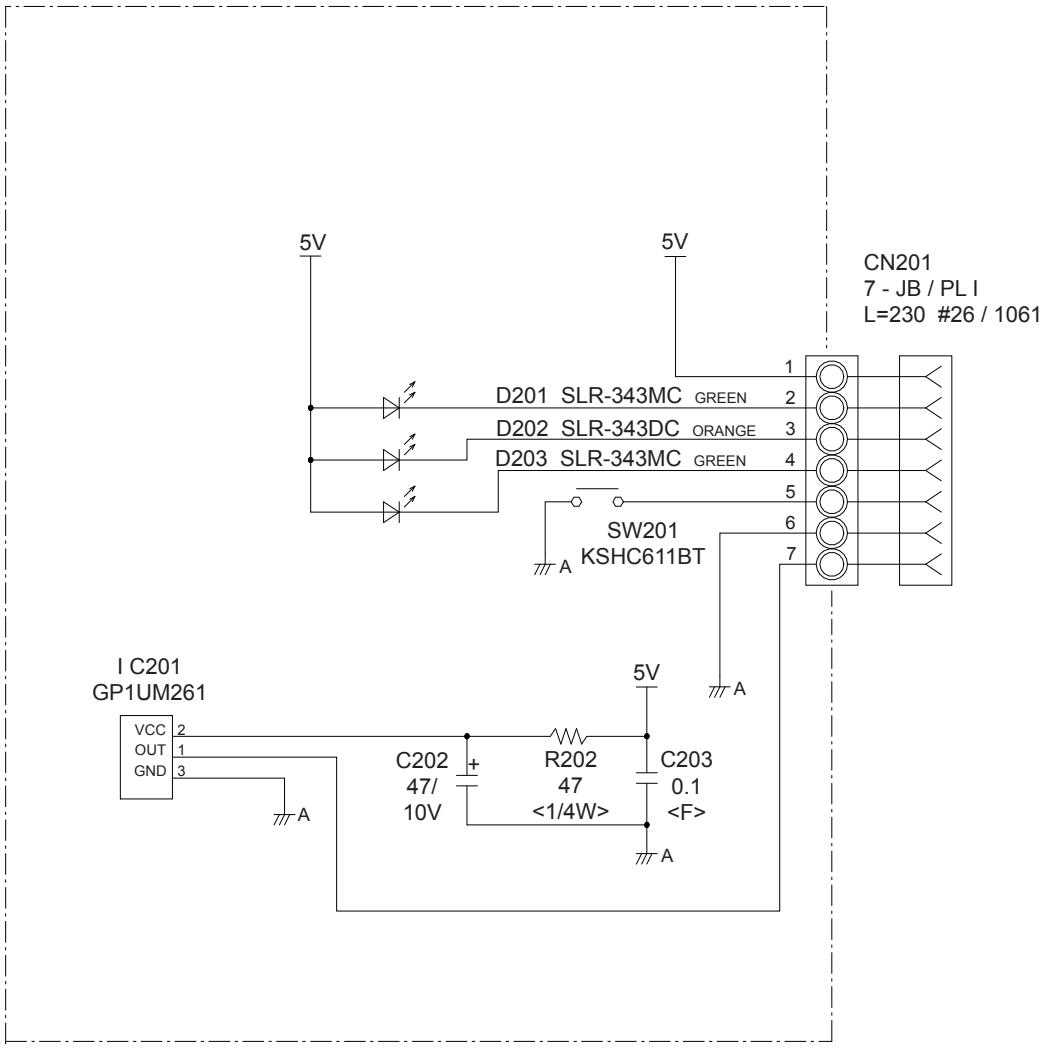

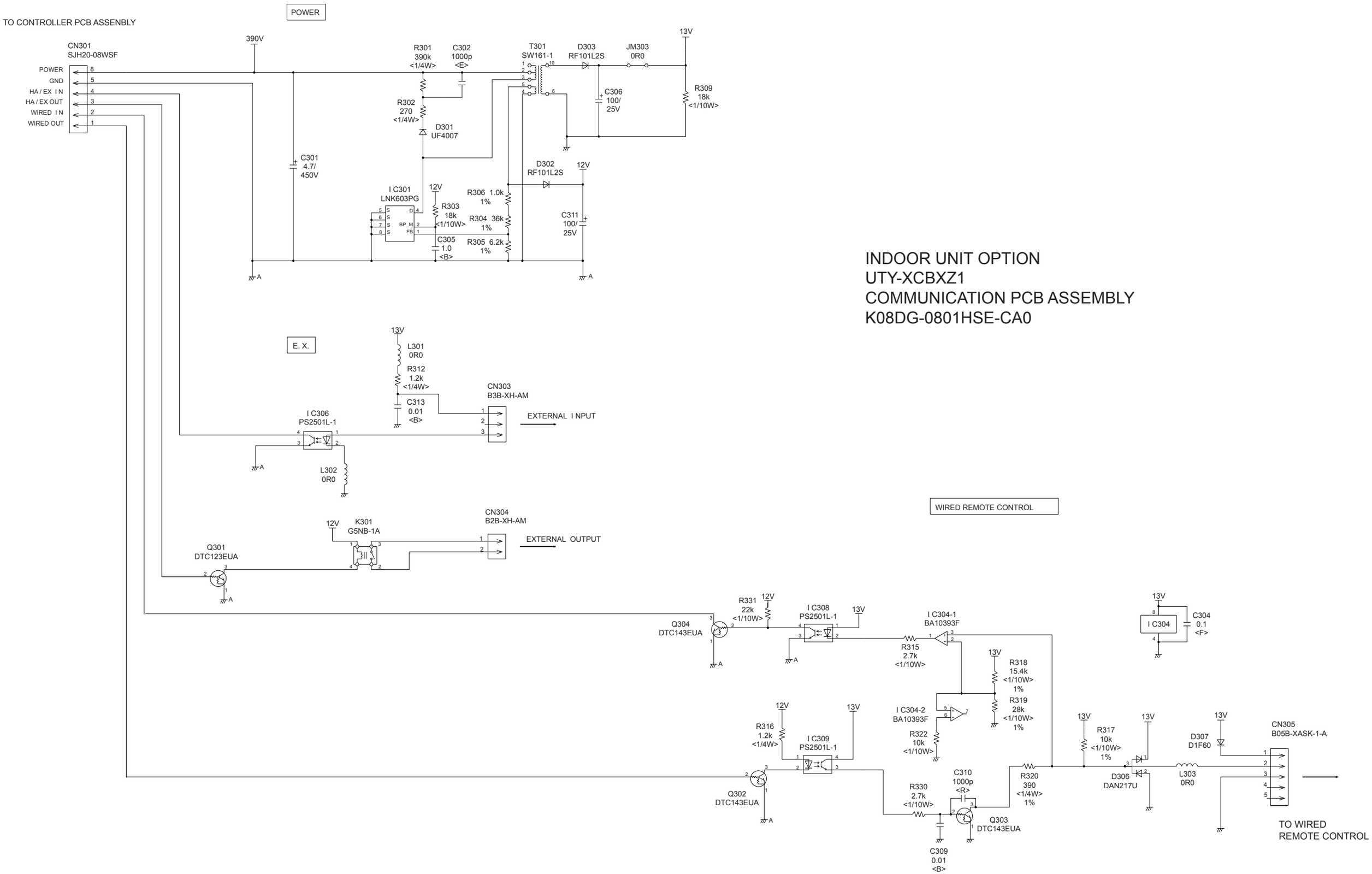


INDOOR UNIT OPTION
UTY-XCBXZ1
COMMUNICATION PCB ASSEMBLY
K08DG-0801HSE-CA0

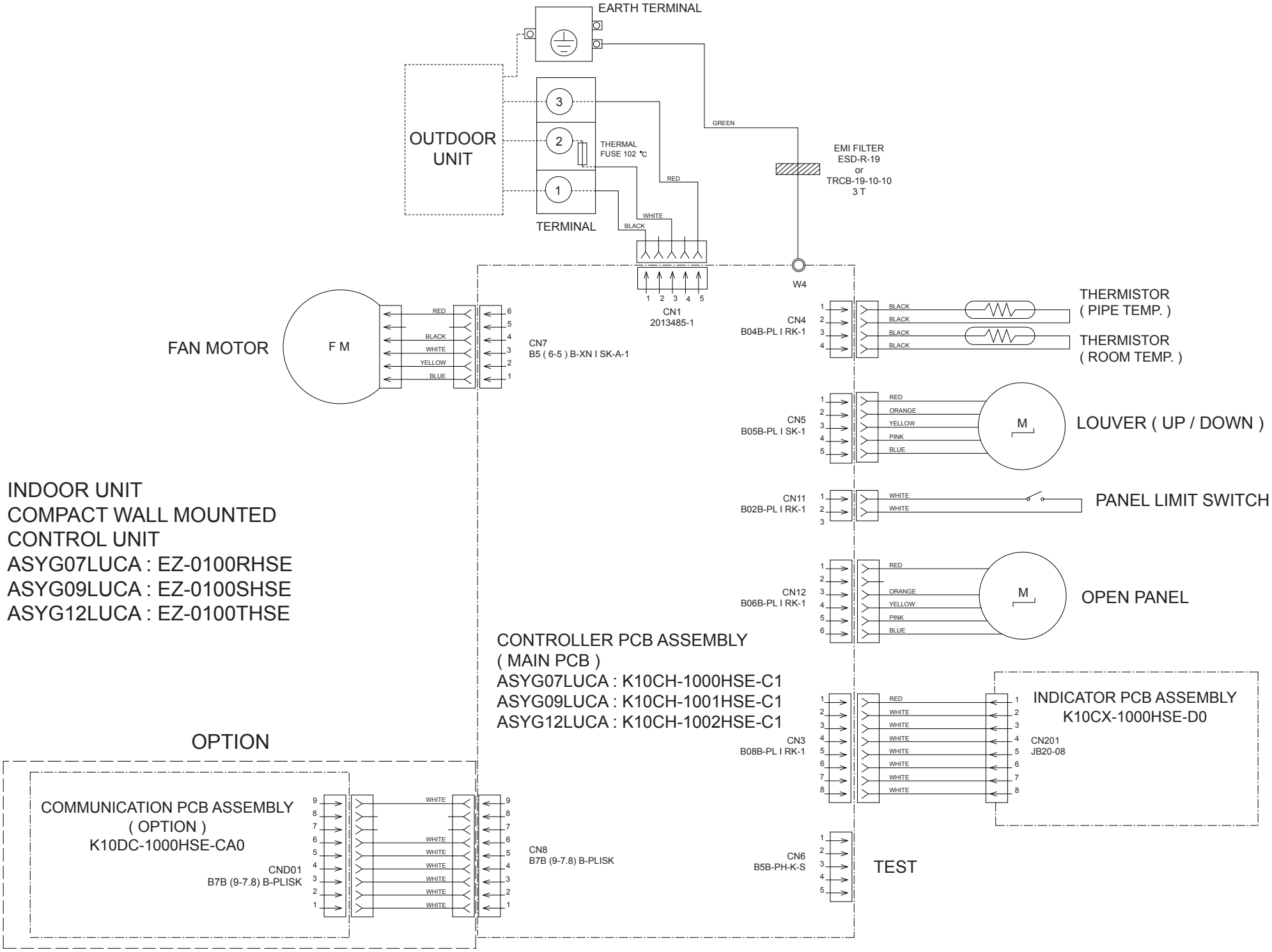
EARTH TERMINAL
OUTDOOR UNIT
THERMAL FUSE 102 °C
TERMINAL
GREEN
RED
WHITE
BLACK
EMI FILTER ESD-R-19 or TRCB-19-10-10 3 T
W4
CN1 2013485-1
FAN MOTOR
F M
RED
BLACK
WHITE
YELLOW
BLUE
CN7 B5 ( 6-5 ) B-XN I SK-A-1
CN4 B04B-PL I RK-1
THERMISTOR ( PIPE TEMP. )
THERMISTOR ( ROOM TEMP. )
CN5 B05B-PL I SK-1
ORANGE
PINK
M
LOUVER ( UP / DOWN )
CN11 B02B-PL I RK-1
PANEL LIMIT SWITCH
CN12 B06B-PL I RK-1
OPEN PANEL
INDOOR UNIT
COMPACT WALL MOUNTED
CONTROL UNIT
ASYG07LUCA : EZ-0100RHSE
ASYG09LUCA : EZ-0100SHSE
ASYG12LUCA : EZ-0100THSE
CONTROLLER PCB ASSEMBLY
( MAIN PCB )
ASYG07LUCA : K10CH-1000HSE-C1
ASYG09LUCA : K10CH-1001HSE-C1
ASYG12LUCA : K10CH-1002HSE-C1
CN3 B08B-PL I RK-1
INDICATOR PCB ASSEMBLY
K10CX-1000HSE-D0
CN201 JB20-08
OPTION
COMMUNICATION PCB ASSEMBLY
( OPTION )
K10DC-1000HSE-CA0
CND01 B7B (9-7.8) B-PLISK
CN8 B7B (9-7.8) B-PLISK
CN6 B5B-PH-K-S
TEST

INDOOR UNIT
COMPACT WALL MOUNTED
CONTROLLER PCB ASSEMBLY
( MAIN PCB )
ASYG07LUCA : K10CH-1000HSE-C1
ASYG09LUCA : K10CH-1001HSE-C1
ASYG12LUCA : K10CH-1002HSE-C1

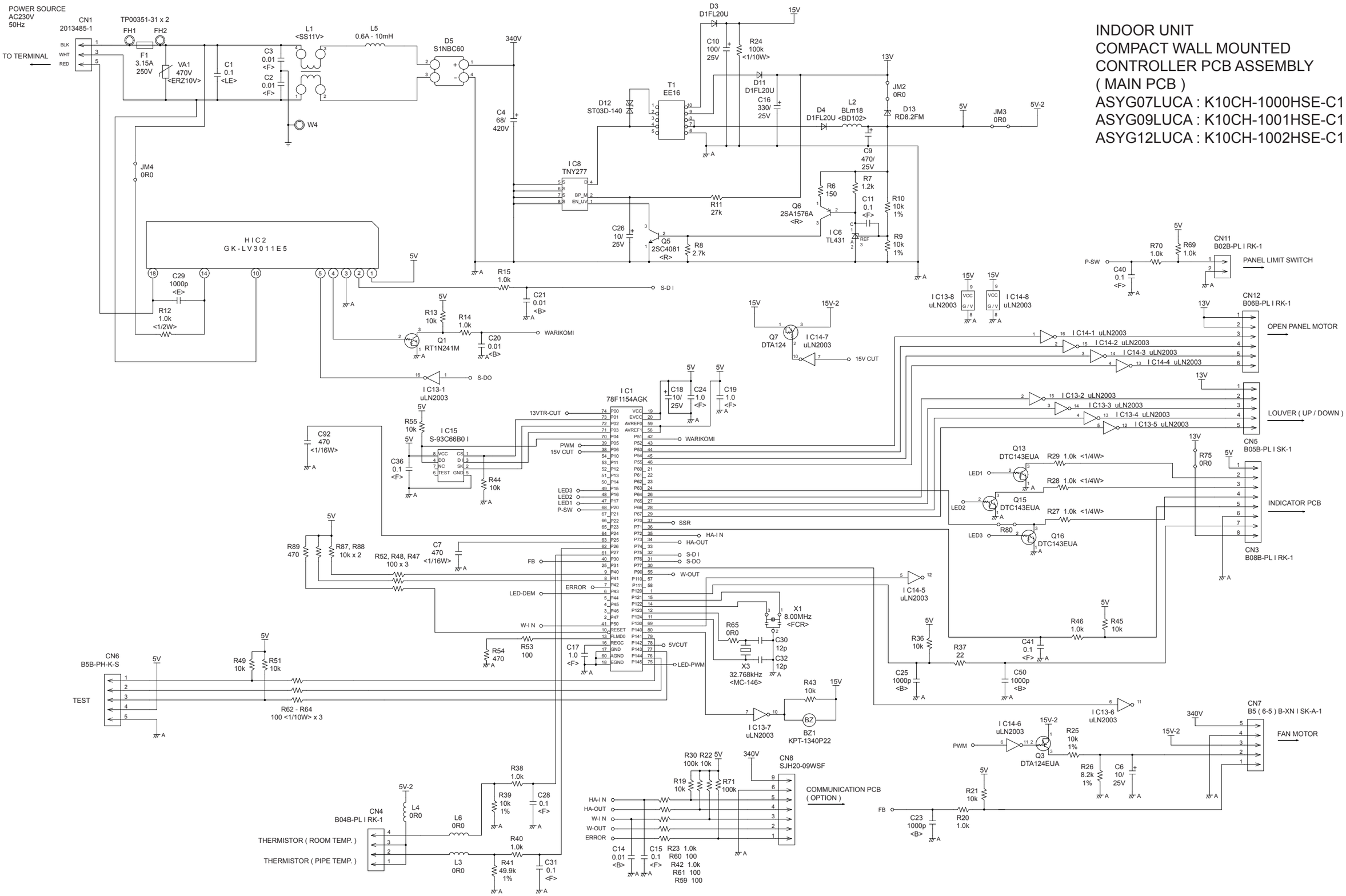

INDOOR UNIT
COMPACT WALL MOUNTED
ASYG07LUCA
ASYG09LUCA
ASYG12LUCA
INDICATOR PCB ASSEMBLY
K10CX-1000HSE-D0

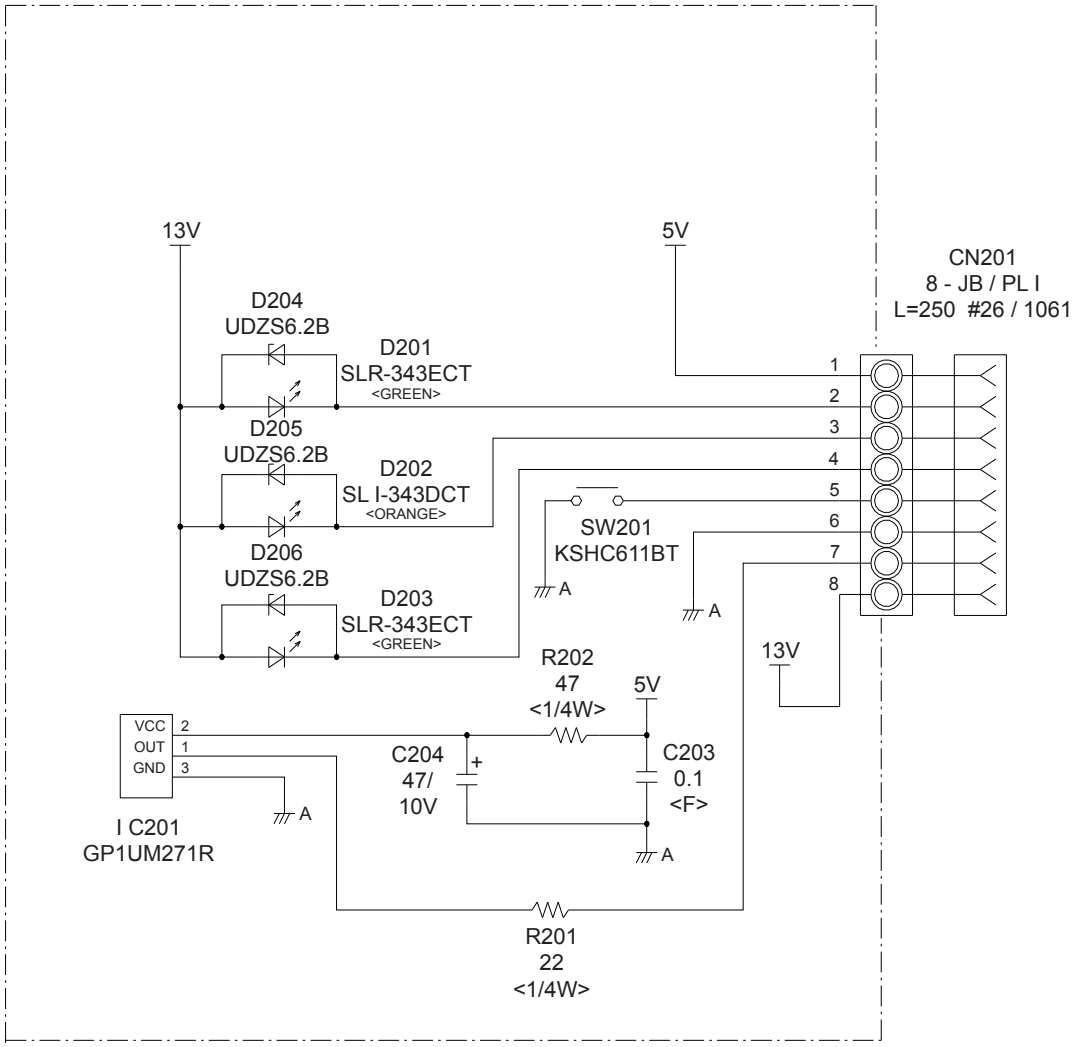

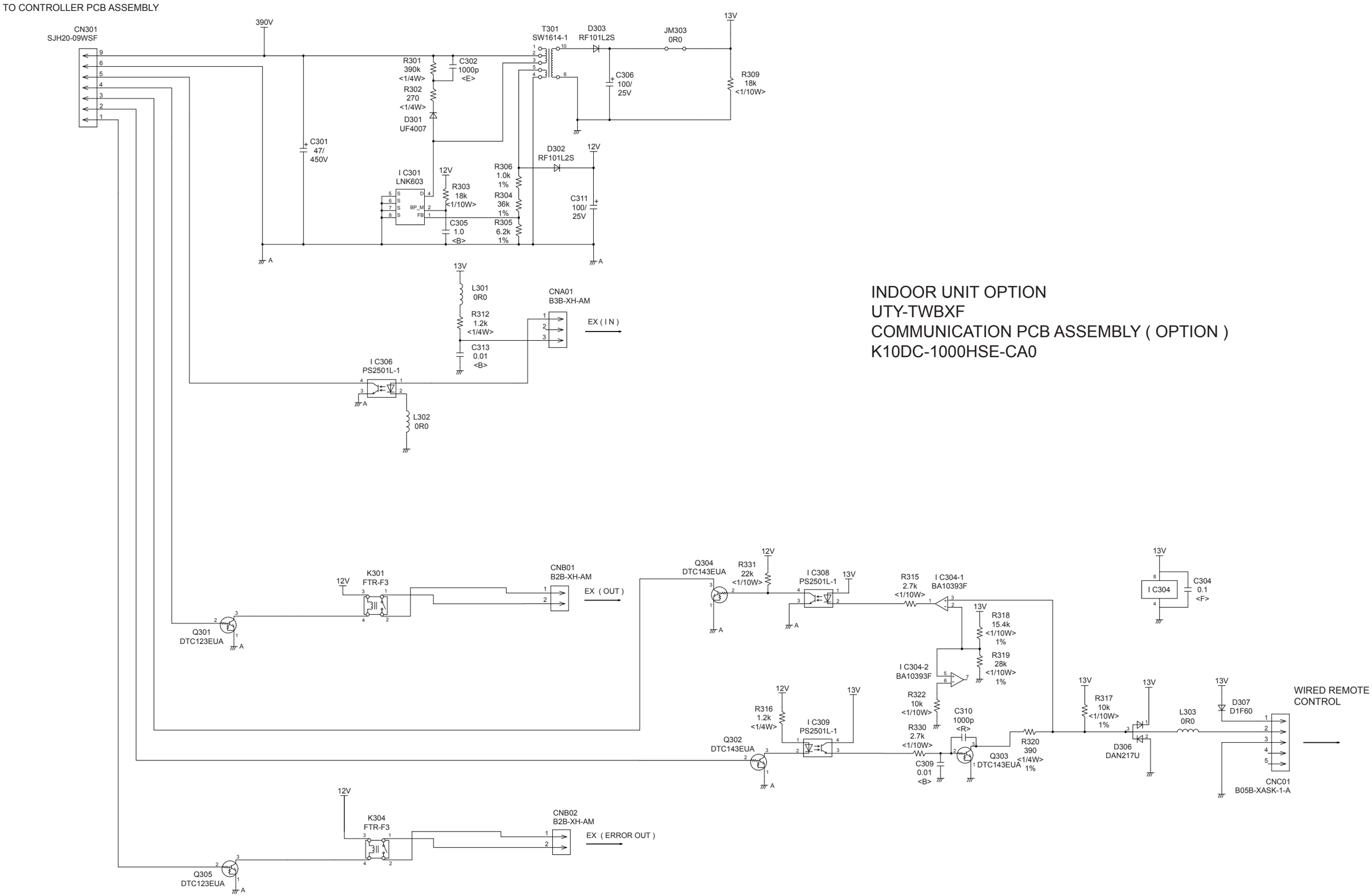


INDOOR UNIT OPTION
UTY-TWBXF
COMMUNICATION PCB ASSEMBLY ( OPTION )
K10DC-1000HSE-CA0

INDOOR UNIT
WALL MOUNTED
CONTROL UNIT
ASAG18LFCA : EZ-010YHSE
ASAG24LFCA : EZ-01001HSE

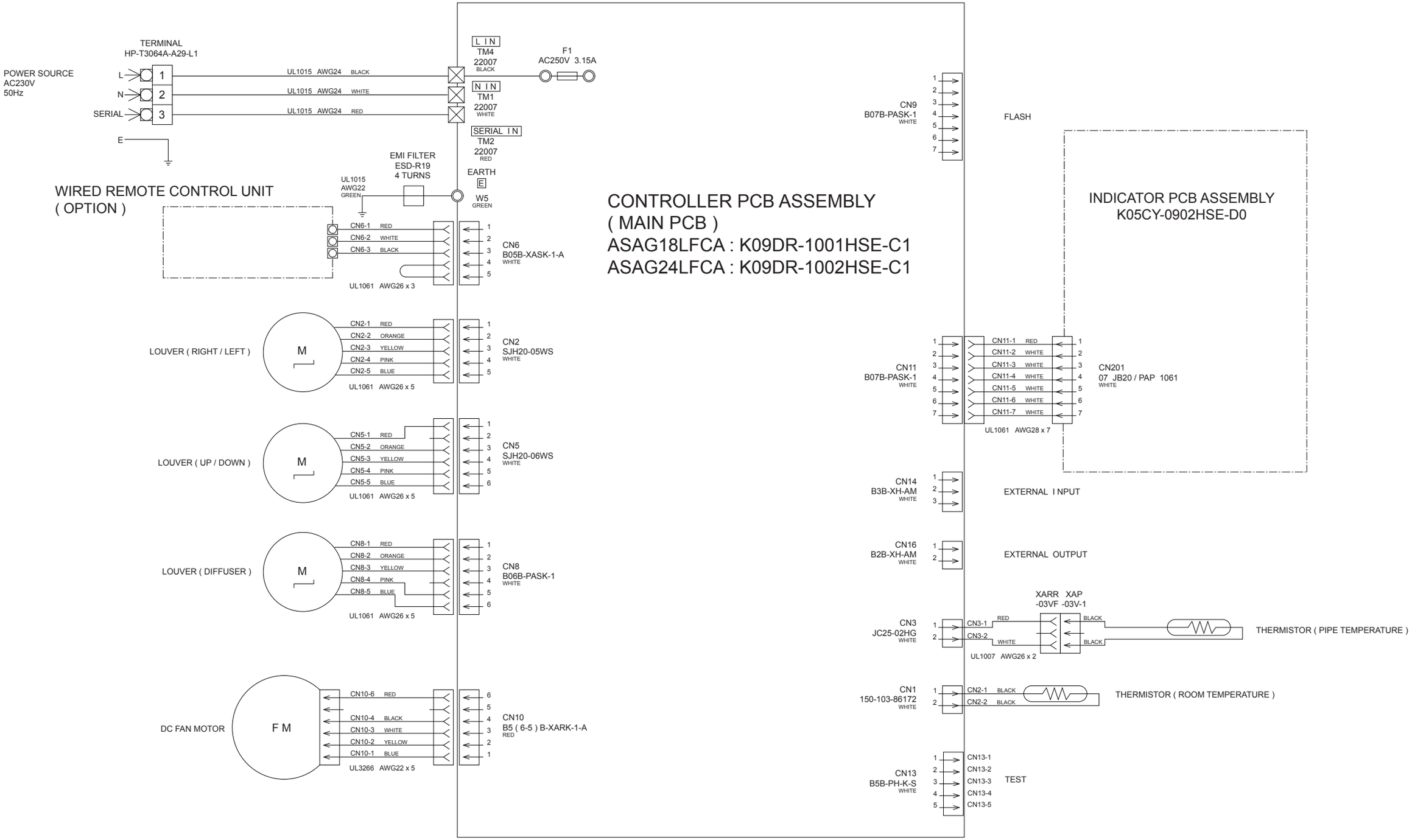

INDOOR UNIT
WALL MOUNTED
CONTROLLER PCB ASSEMBLY
( MAIN PCB )
ASAG18LFCA : K09DR-1001HSE-C1
ASAG24LFCA : K09DR-1002HSE-C1

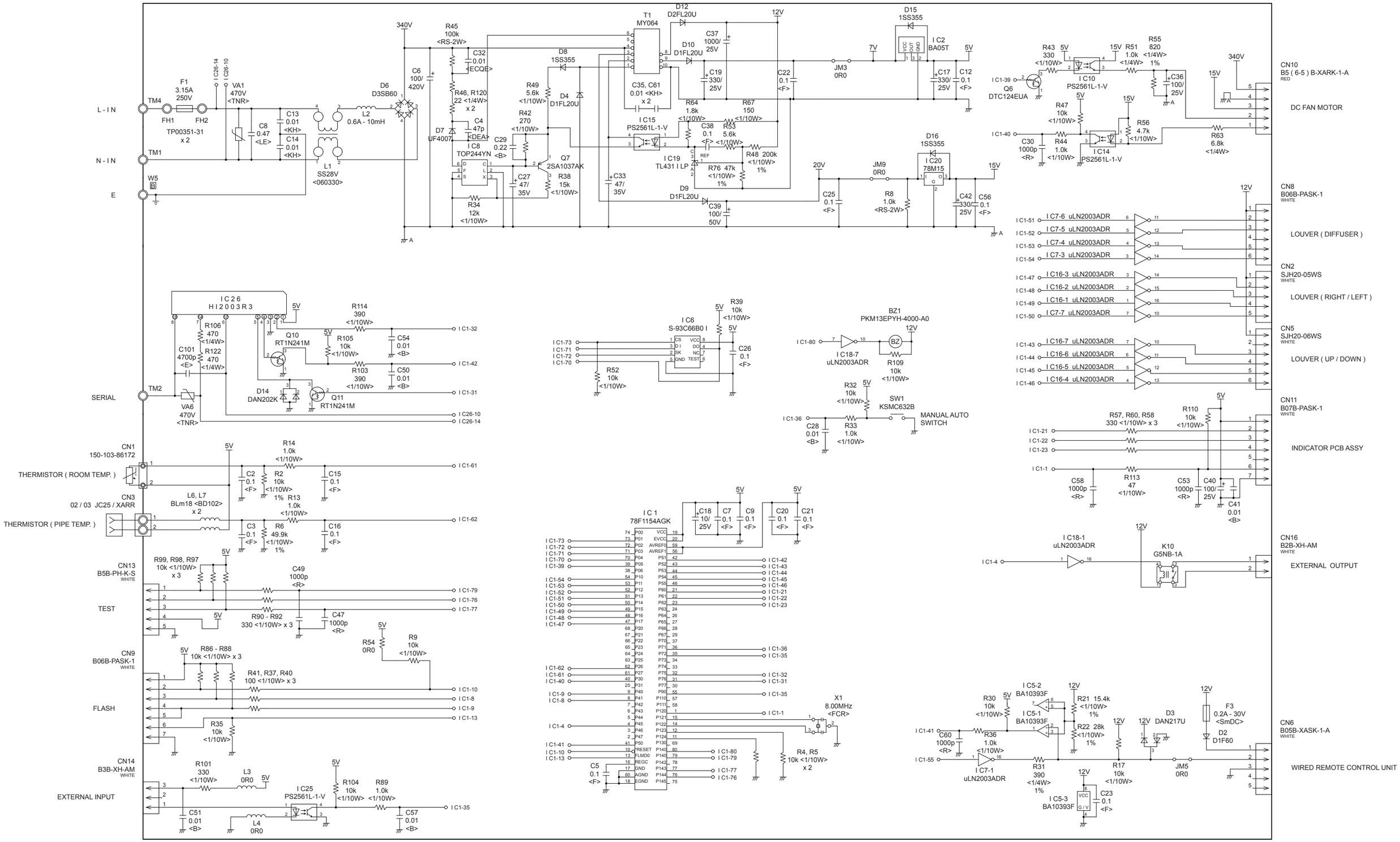

INDOOR UNIT
WALL MOUNTED
ASAG18LFCA
ASAG24LFCA
INDICATOR PCB ASSEMBLY
K05CY-0902HSE-D0

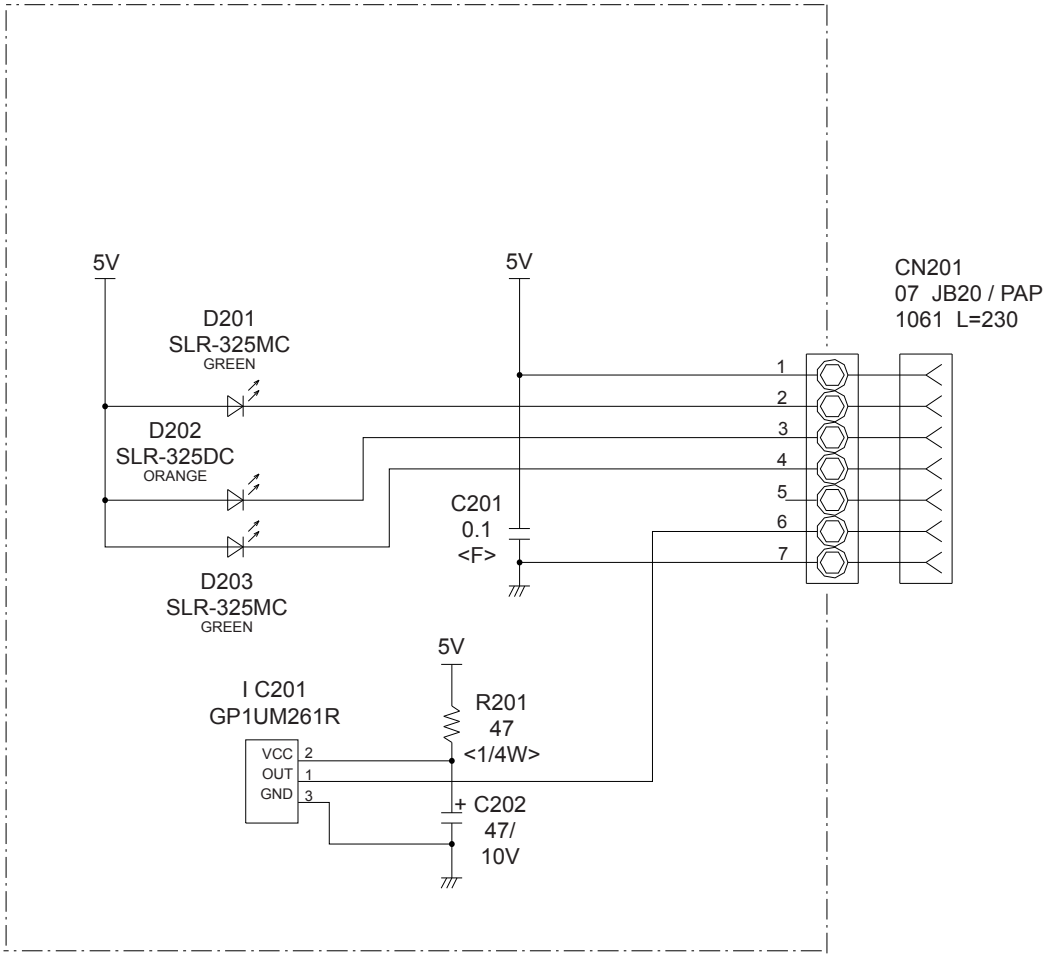

INDOOR UNIT
COMPACT CASSETTE
CONTROL UNIT
AUAG09LVLA : EZ-01005HSE
AUAG12LVLA : EZ-01006HSE
AUAG14LVLA : EZ-01007HSE
AUAG18LVLA : EZ-01008HSE

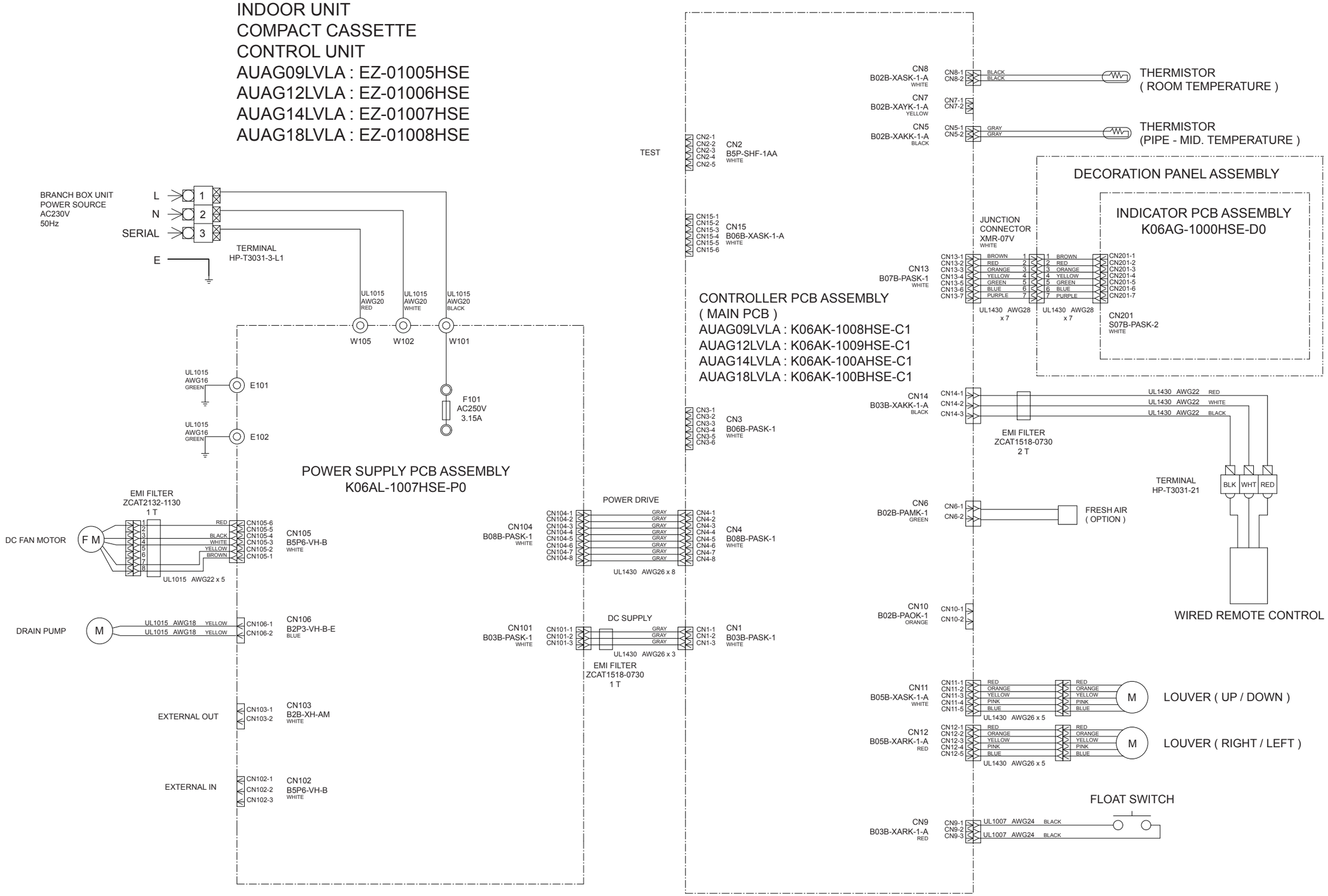

INDOOR UNIT
CONTROLLER PCB ASSEMBLY ( MAIN PCB )

| COMPACT CASSETTE | SLIM DUCT |
|---|---|
| AUAG09LVLA : K06AK-1008HSE-C1 | ARAG09LLLA : K06AK-100DHSE-C1 |
| AUAG12LVLA : K06AK-1009HSE-C1 | ARAG12LLLA : K06AK-100EHSE-C1 |
| AUAG14LVLA : K06AK-100AHSE-C1 | ARAG14LLLA : K06AK-100FHSE-C1 |
| AUAG18LVLA : K06AK-100BHSE-C1 | ARAG18LLLA : K06AK-100GHSE-C1 |
| | ARAG24LLLA : K06AK-1100HSE-C1 |

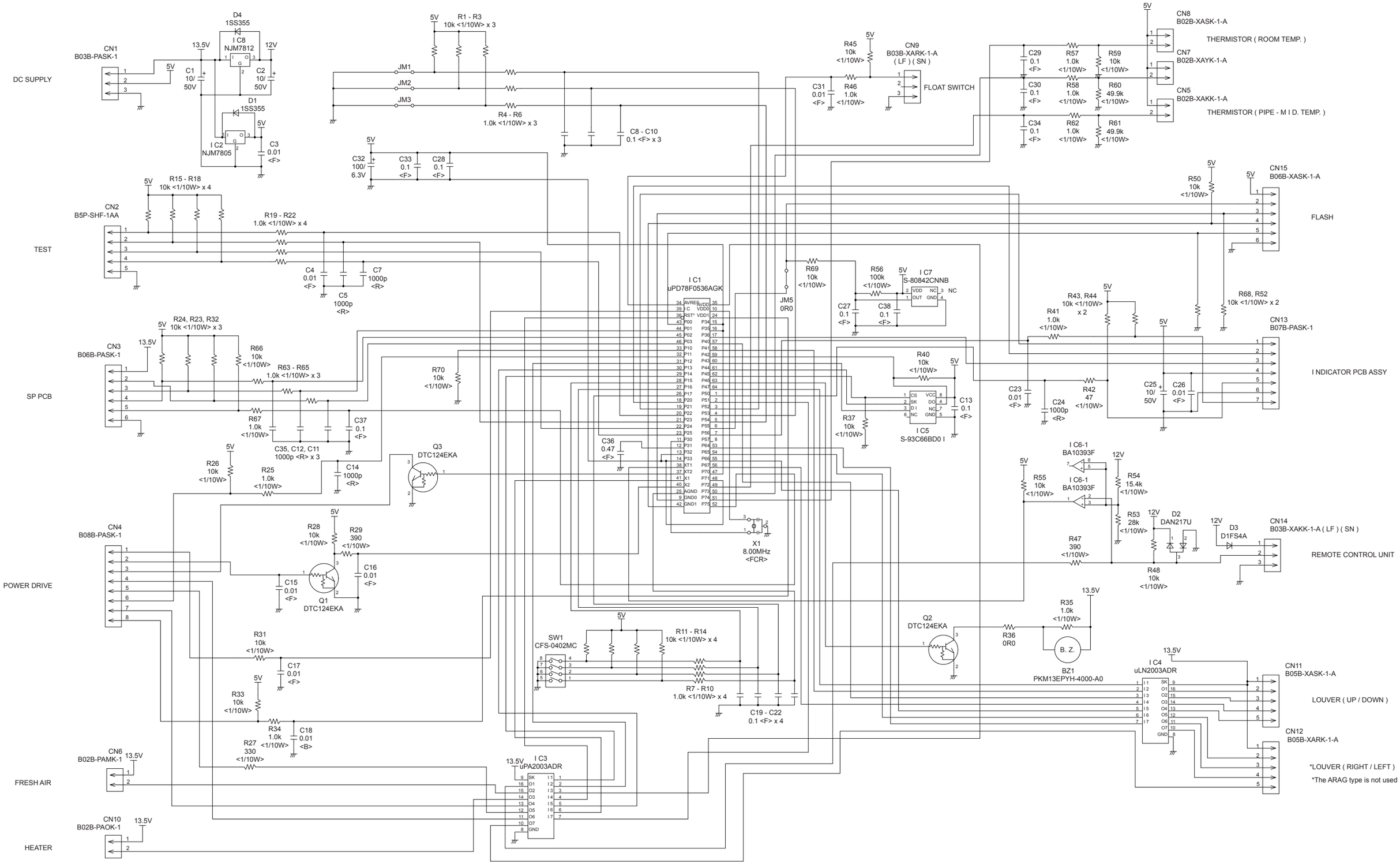

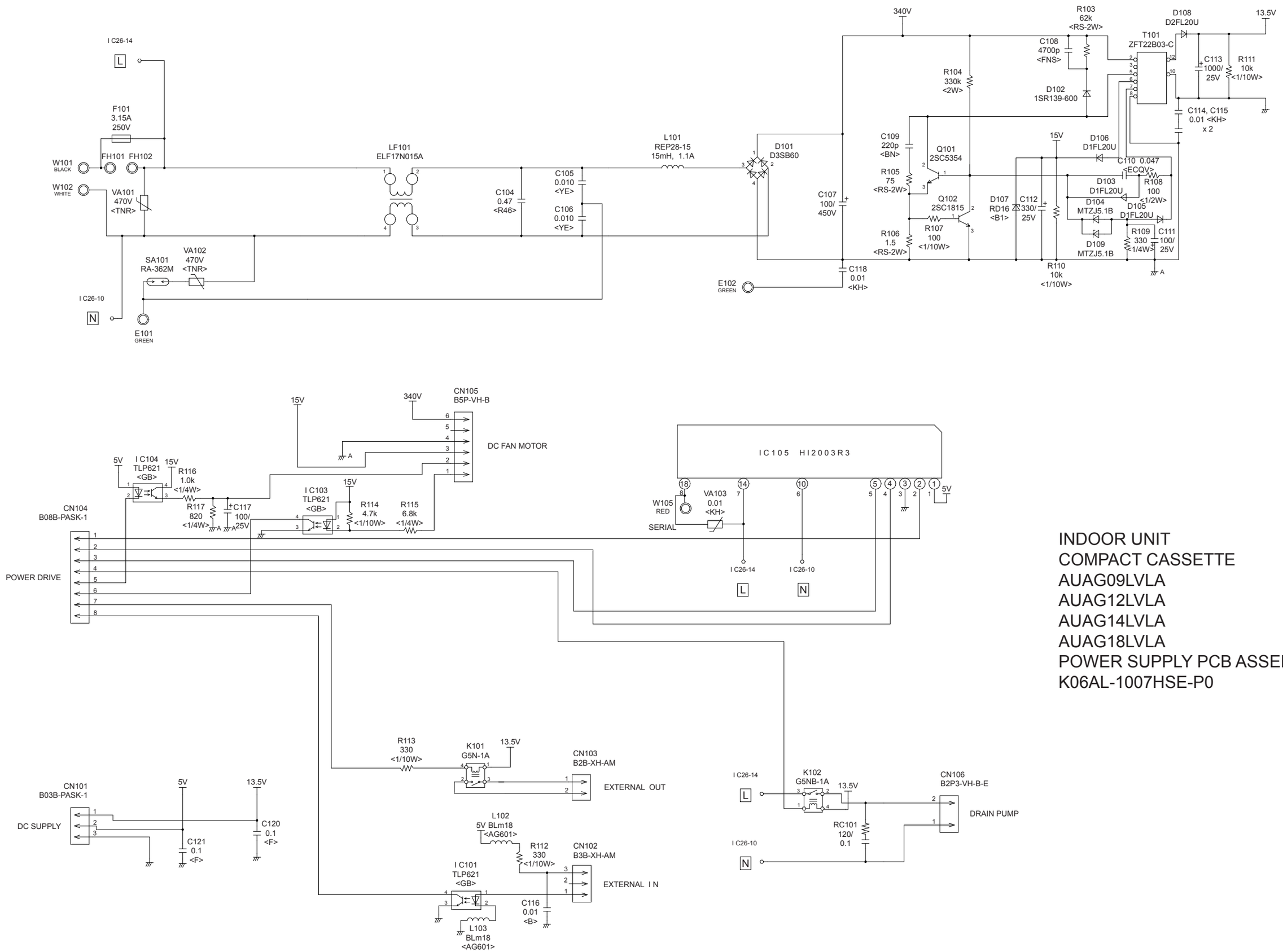


INDOOR UNIT
COMPACT CASSETTE
AUAG09LVLA
AUAG12LVLA
AUAG14LVLA
AUAG18LVLA
POWER SUPPLY PCB ASSEMBLY
K06AL-1007HSE-P0

INDOOR UNIT
COMPACT CASSETTE
AUAG09LVLA
AUAG12LVLA
AUAG14LVLA
AUAG18LVLA
INDICATOR PCB ASSEMBLY
K06AG-1000HSE-D0

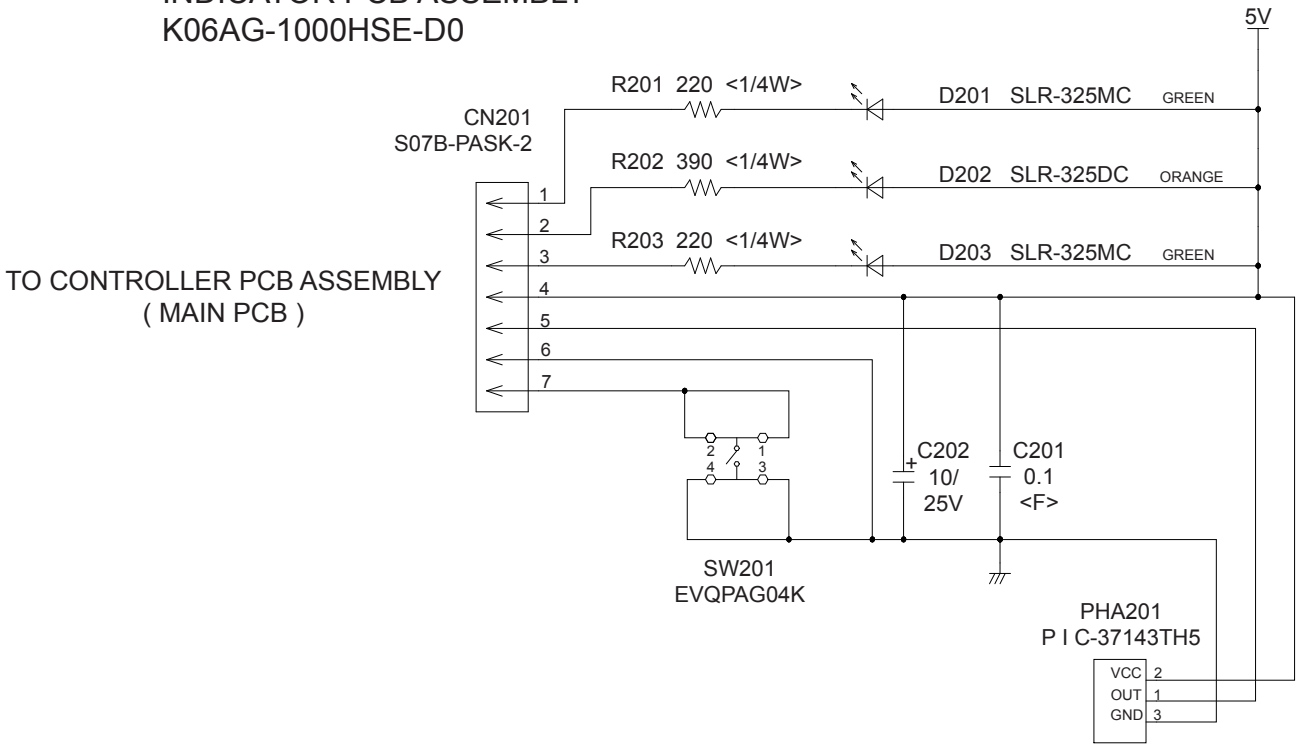

INDOOR UNIT
SLIM DUCT
CONTROL UNIT
ARAG09LLLA : EZ-0110KHSE
ARAG12LLLA : EZ-0110LHSE
ARAG14LLLA : EZ-0110MHSE
ARAG18LLLA : EZ-0110PHSE
ARAG24LLLA : EZ-01104HSE

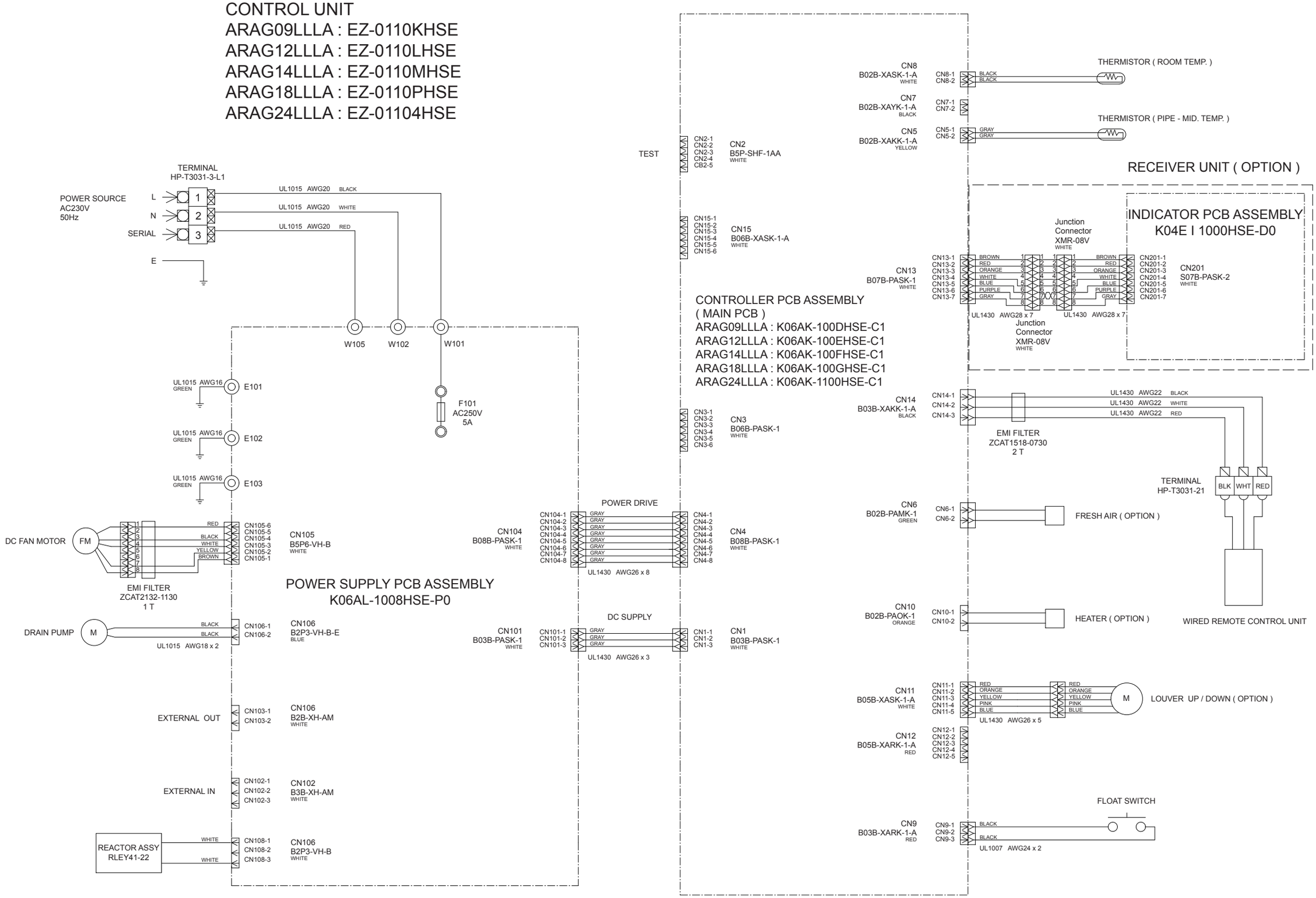

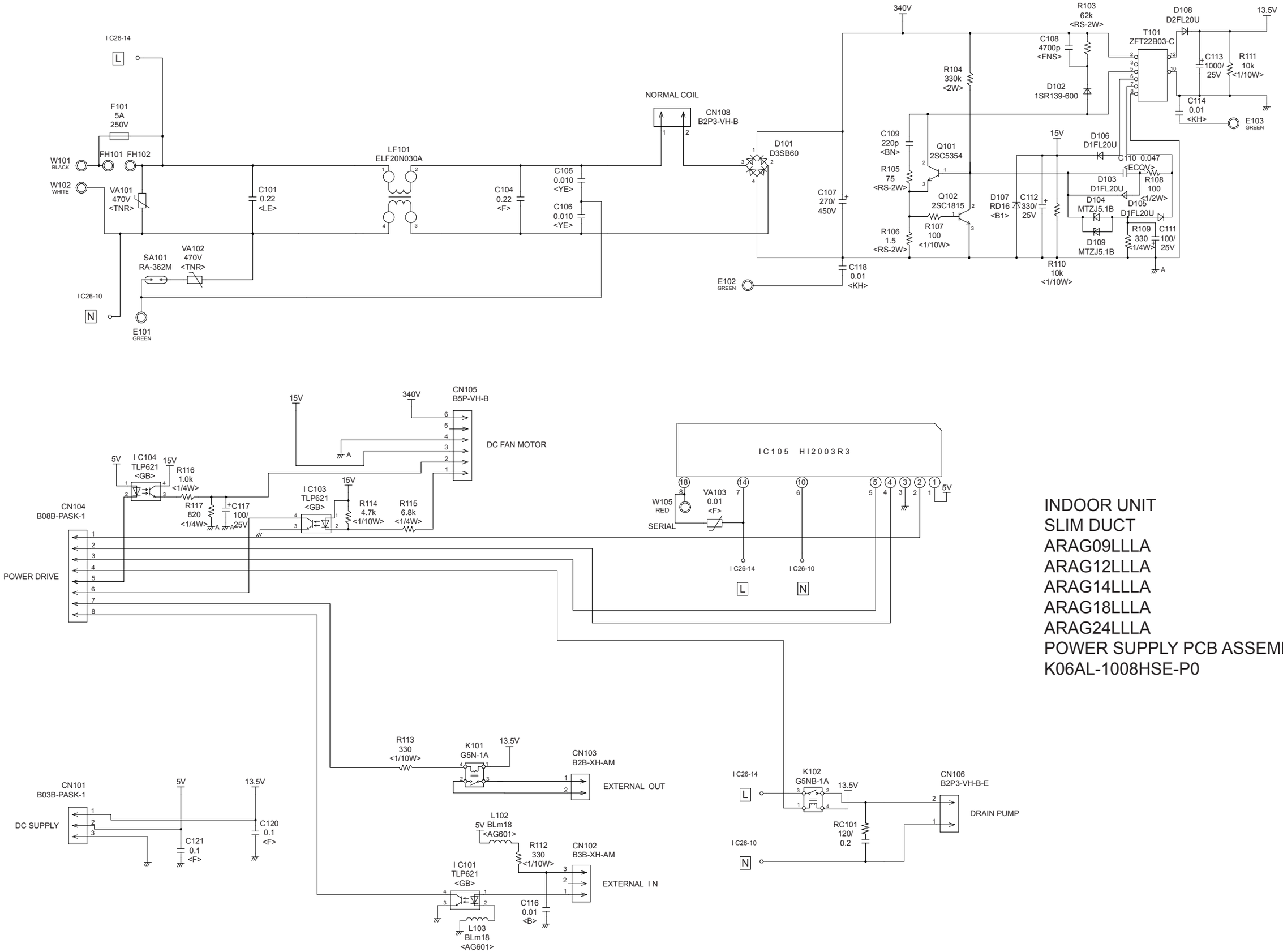


INDOOR UNIT
SLIM DUCT
ARAG09LLLA
ARAG12LLLA
ARAG14LLLA
ARAG18LLLA
ARAG24LLLA
POWER SUPPLY PCB ASSEMBLY
K06AL-1008HSE-P0

INDOOR UNIT
SLIM DUCT
ARAG09LLLA
ARAG12LLLA
ARAG14LLLA
ARAG18LLLA
ARAG24LLLA
INDICATOR PCB ASSEMBLY
( OPTION )
K04EI-1000HSE-D0

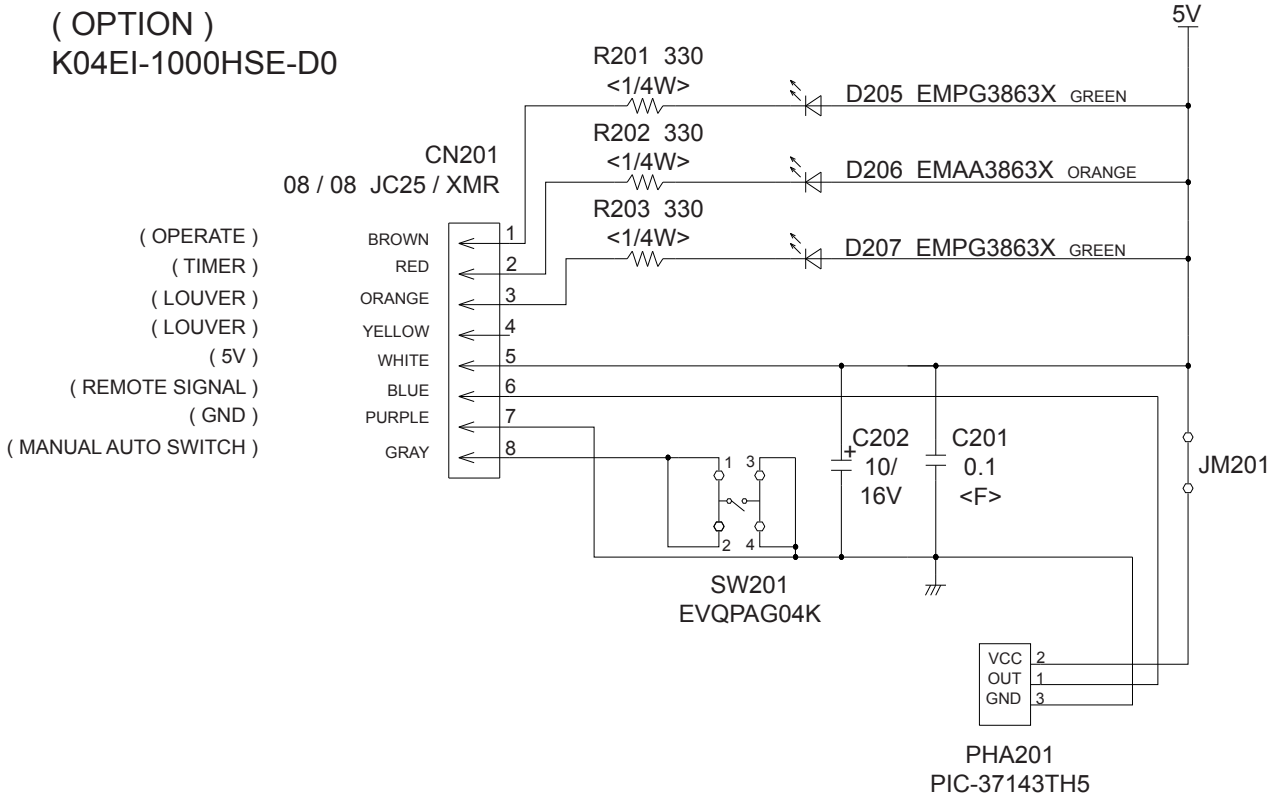

# ERROR DETECTION

● : flashing
— : Off

OUTDOOR UNIT

| | LED 1 | LED 2 | LED 3 | LED 4 |
|---|---|---|---|---|
| Communication error (outdoor unit to indoor unit A) | ● 1 time | — | — | — |
| Communication error (outdoor unit to indoor unit B) | — | ● 1 time | — | — |
| Communication error (outdoor unit to indoor unit C) | — | — | ● 1 time | — |
| Communication error (outdoor unit to indoor unit D) | — | — | — | ● 1 time |
| Discharge pipe thermistor | ● 2 times | — | — | — |
| Outdoor unit, heat exchanger thermistor (middle) | ● 3 times | — | — | — |
| Outdoor thermistor error | ● 4 times | — | — | — |
| 2-way valve thermistor (indoor unit A) | ● 5 times | — | — | — |
| 2-way valve thermistor (indoor unit B) | — | ● 5 times | — | — |
| 2-way valve thermistor (indoor unit C) | — | — | ● 5 times | — |
| 2-way valve thermistor (indoor unit D) | — | — | — | ● 5 times |
| 3-way valve thermistor (indoor unit A) | ● 6 times | — | — | — |
| 3-way valve thermistor (indoor unit B) | — | ● 6 times | — | — |
| 3-way valve thermistor (indoor unit C) | — | — | ● 6 times | — |
| 3-way valve thermistor (indoor unit D) | — | — | — | ● 6 times |
| Compressor thermistor error | ● 7 times | — | — | — |
| Heatsink thermistor error | ● 8 times | — | — | — |
| High pressure switch 1 error | ● 9 times | — | — | — |
| High pressure switch 2 error | ● 10 times | — | — | — |
| Indoor unit capacity error | ● 11 times | — | — | — |
| Trip detection | ● 12 times | — | — | — |
| Compressor roter position detetion error | ● 13 times | — | — | — |
| Trip terminal L error | ● 14 times | — | — | — |
| Outdoor unit fan motor error | ● 15 times | — | — | — |
| Outdoor unit PCB microcomputer communication error | ● 17 times | — | — | — |
| Discharge temperature error | ● 18 times | — | — | — |
| Compressor temperature error | ● 19 times | — | — | — |
| 4-way valve error | ● 20 times | — | — | — |
| Outdoor unit PCB model information error | ● 21 times | — | — | — |
| Active filter error, PFC circuit error | ● 22 times | — | — | — |

● : 0.5s on / 0.5s off

◇ : 0.1s on / 0.1s off

( ) : Number of flashing

## INDOOR UNIT and WIRED REMOTE CONTROL

If you use a wireless remote control, the lamp on the photo detector unit will output error codes by way of blinking patterns.
If you use a wired type remote control, error codes will appear on the remote control display. See the lamp blinking patterns and error codes in the table. An error display is displayed only during running.

| Indoor unit | | | Wired remote control | Description |
|---|---|---|---|---|
| OPERATION lamp (green) | TIMER lamp (orange) | ECONOMY lamp (green) | | |
| ●(1) | ●(1) | ◇ | 11 | Serial communication error |
| ●(1) | ●(2) | ◇ | 12 | Wired remote control communication error |
| ●(1) | ●(5) | ◇ | 15 | Check run unfinished |
| ●(2) | ●(1) | ◇ | 21 | Unit number or Refrigerant circuit address setting error [Simultaneous Multi] |
| ●(2) | ●(2) | ◇ | 22 | Indoor unit capacity error |
| ●(2) | ●(3) | ◇ | 23 | Combination error |
| ●(2) | ●(4) | ◇ | 24 | • Connection unit number error (indoor slave unit) [Simultaneous Multi]<br>• Connection unit number error (indoor unit or branch unit) [Flexible Multi] |
| ●(2) | ●(7) | ◇ | 27 | Master unit, slave unit set-up error [Simultaneous Multi] |
| ●(3) | ●(2) | ◇ | 32 | Indoor unit PCB model information error |
| ●(3) | ●(5) | ◇ | 35 | Manual auto switch error |
| ●(4) | ●(1) | ◇ | 41 | Inlet air temp. sensor error |
| ●(4) | ●(2) | ◇ | 42 | Indoor unit Heat Ex. Middle temp. sensor error |
| ●(5) | ●(1) | ◇ | 51 | Indoor unit fan motor error |
| ●(5) | ●(3) | ◇ | 53 | Drain pump error |
| ●(5) | ●(7) | ◇ | 57 | Damper error |
| ●(5) | ●(15) | ◇ | 5U | Indoor unit error |
| ●(6) | ●(2) | ◇ | 62 | Outdoor unit main PCB model information error or communication error |
| ●(6) | ●(3) | ◇ | 63 | Inverter error |
| ●(6) | ●(4) | ◇ | 64 | Active filter error, PFC circuit error |
| ●(6) | ●(5) | ◇ | 65 | Trip terminal L error |
| ●(6) | ●(10) | ◇ | 6A | Display PCB microcomputers communication error |
| ●(7) | ●(1) | ◇ | 71 | Discharge temp. sensor error |
| ●(7) | ●(2) | ◇ | 72 | Compressor temp. sensor error |
| ●(7) | ●(3) | ◇ | 73 | Outdoor unit Heat Ex. liquid temp. sensor error |
| ●(7) | ●(4) | ◇ | 74 | Outdoor temp. sensor error |
| ●(7) | ●(5) | ◇ | 75 | Suction Gas temp. sensor error |
| ●(7) | ●(6) | ◇ | 76 | • 2-way valve temp. sensor error<br>• 3-way valve temp. sensor error |
| ●(7) | ●(7) | ◇ | 77 | Heat sink temp. sensor error |
| ●(8) | ●(2) | ◇ | 82 | • Sub-cool Heat Ex. gas inlet temp. sensor error<br>• Sub-cool Heat Ex. gas outlet temp. sensor error |
| ●(8) | ●(3) | ◇ | 83 | Liquid pipe temp. sensor error |
| ●(8) | ●(4) | ◇ | 84 | Current sensor error |
| ●(8) | ●(6) | ◇ | 86 | • Discharge pressure sensor error<br>• Suction pressure sensor error<br>• High pressure switch error |
| ●(9) | ●(4) | ◇ | 94 | Trip detection |
| ●(9) | ●(5) | ◇ | 95 | Compressor rotor position detection error (permanent stop) |
| ●(9) | ●(7) | ◇ | 97 | Outdoor unit fan motor error |
| ●(9) | ●(9) | ◇ | 99 | 4-way valve error |
| ●(10) | ●(1) | ◇ | A1 | Discharge temp. error |
| ●(10) | ●(3) | ◇ | A3 | Compressor temp. error |
| ●(10) | ●(4) | ◇ | A4 | High pressure error |
| ●(10) | ●(5) | ◇ | A5 | Low pressure error |
| ●(13) | ●(2) | ◇ | J2 | Branch boxes error [Flexible Multi] |

## This is possible only on a wired remote control.

If an error occurs, the following display will be shown.
(“Er” will appear in the set room temperature display.)

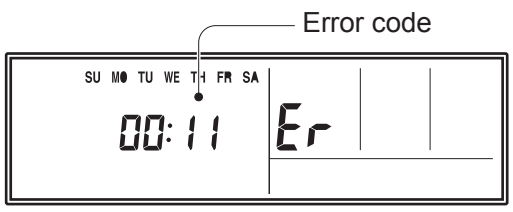


EX. Self-diagnosis

# PARTS

OUTDOOR UNIT

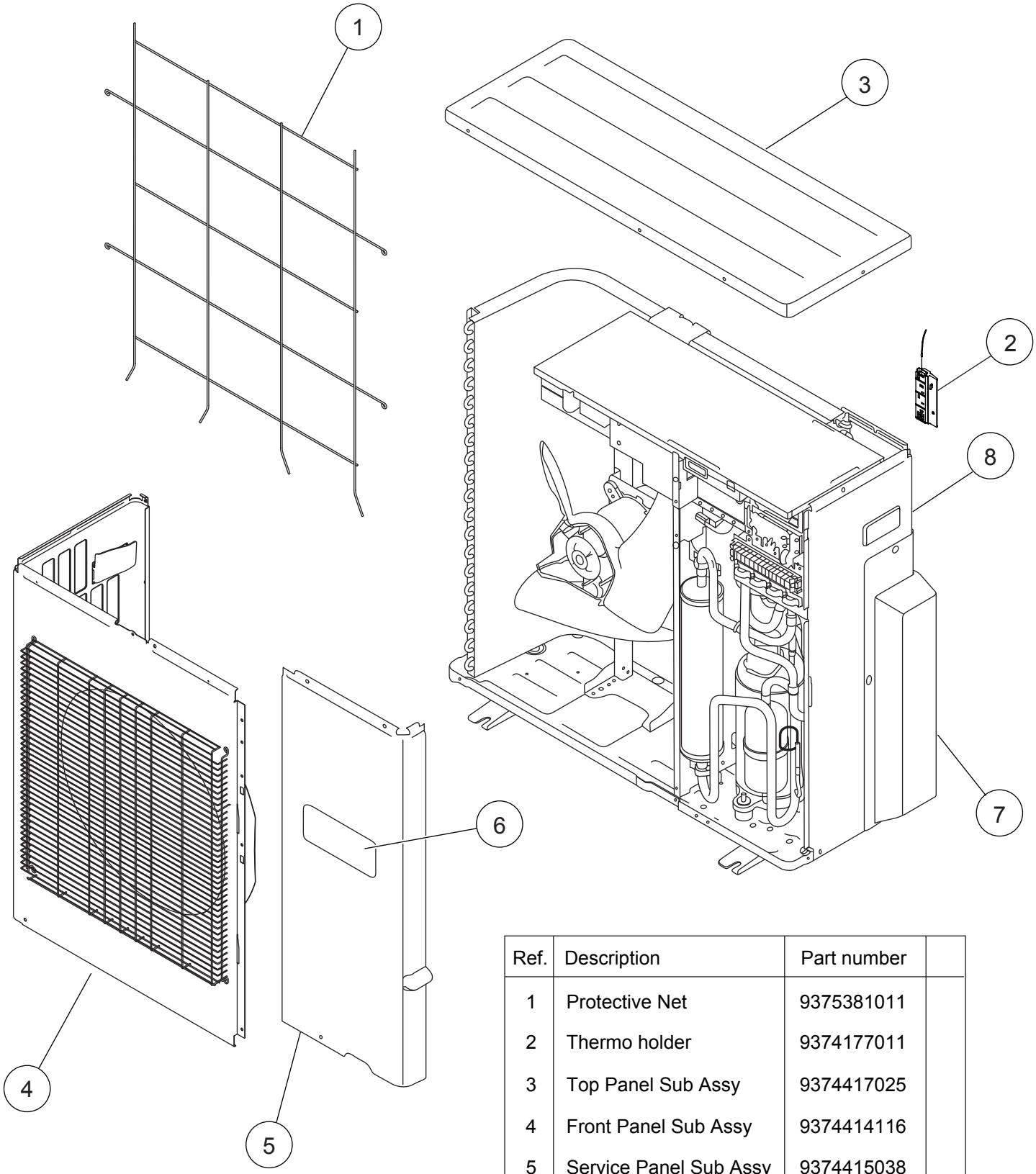


| Ref. | Description | Part number | |
|---|---|---|---|
| 1 | Protective Net | 9375381011 | |
| 2 | Thermo holder | 9374177011 | |
| 3 | Top Panel Sub Assy | 9374417025 | |
| 4 | Front Panel Sub Assy | 9374414116 | |
| 5 | Service Panel Sub Assy | 9374415038 | |
| 6 | Emblem Rear | 9351355005 | |
| 7 | Valve Cover Sub Assy | 9374827015 | |
| 8 | Right Panel Sub Assy | 9374416059 | |

OUTDOOR UNIT

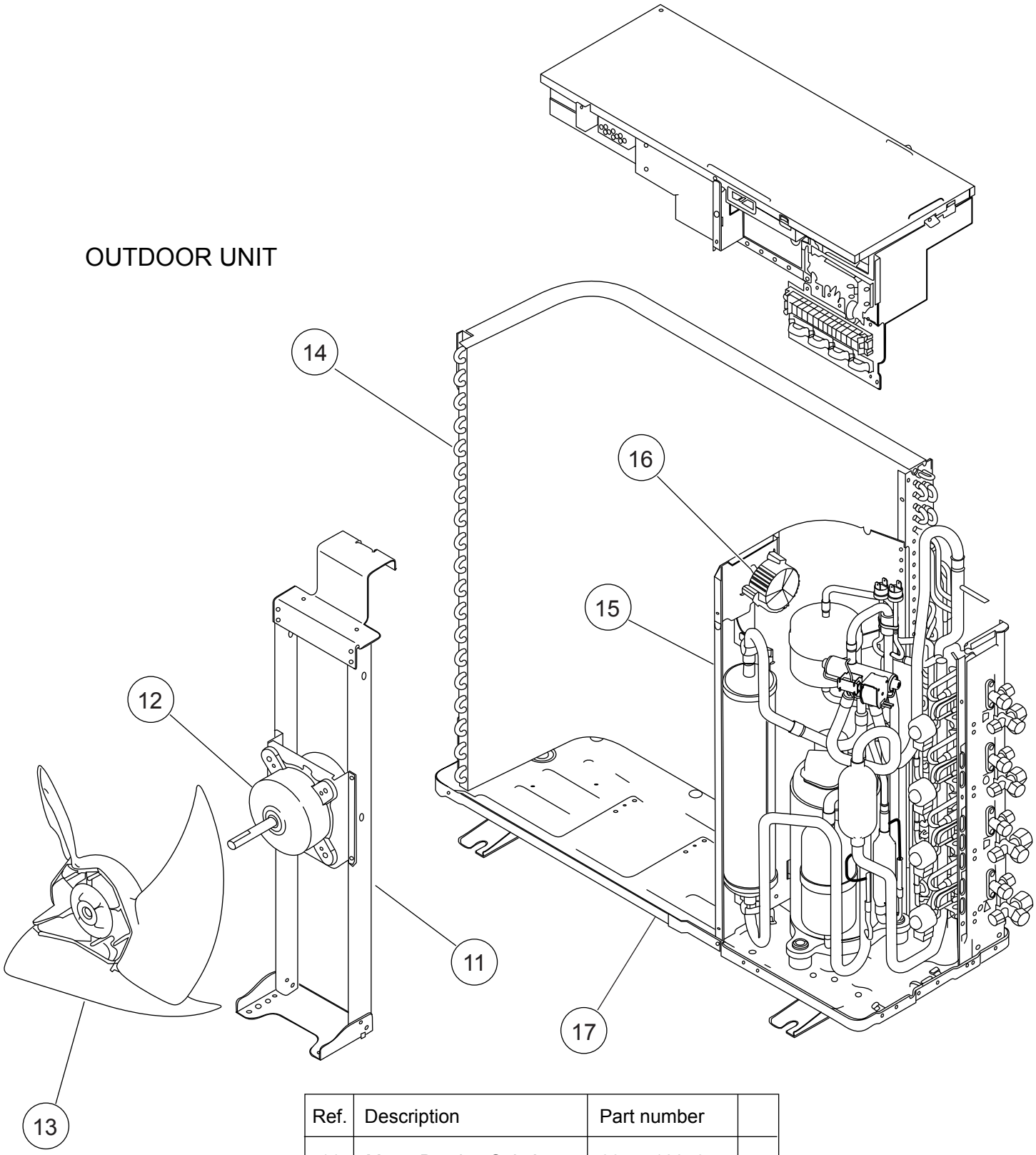


| Ref. | Description | Part number | |
|---|---|---|---|
| 11 | Motor Bracket Sub Assy | 9374418053 | |
| 12 | Fan Motor | 9602843015 | |
| 13 | Propeller Fan Assy | 9366378020 | |
| 14 | Condenser A Sub Assy | 9374420087 | |
| 15 | Separate Wall Sub Assy | 9374413065 | |
| 16 | Choke Coil | 9703458019 | |
| 17 | Base Assy | 9374166084 | |
| -- | Drain Assy | 9303029015 | |
| -- | Drain Cap | 313166024302 | |

OUTDOOR UNIT

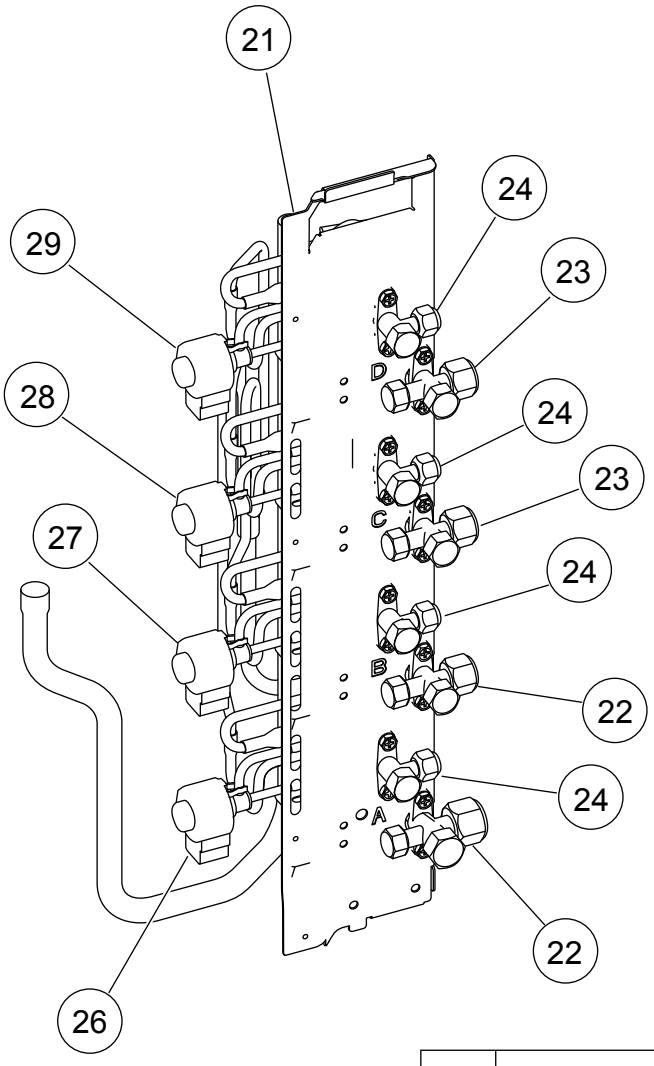


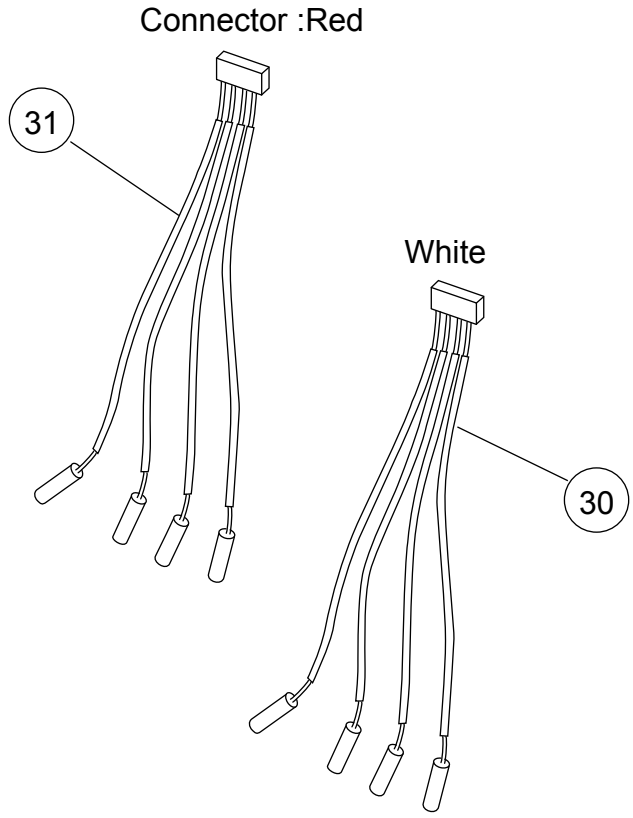


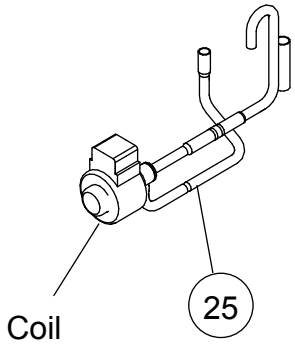


| Ref. | Description | Part number | |
|---|---|---|---|
| 21 | Valve Plate A Assy | 9374628025 | |
| 22 | 3-way Valve Assy (1/2") | 9378282018 | |
| 23 | 3-way Valve Assy (3/8") | 9377958013 | |
| 24 | 2-way Valve Assy | 9375614027 | |
| 25 | Expansion Valve Assy | 9370947151 | |
| 26 | Expansion Valve Coil (A=Red) | 9970101069 | |
| 27 | Expansion Valve Coil (B=White) | 9970101038 | |
| 28 | Expansion Valve Coil (C=Green) | 9970101045 | |
| 29 | Expansion Valve Coil (D=Blue) | 9970101052 | |
| 30 | Pipe Thermistor (White) | 9900543020 | |
| 31 | Pipe Thermistor (Red) | 9900543013 | |

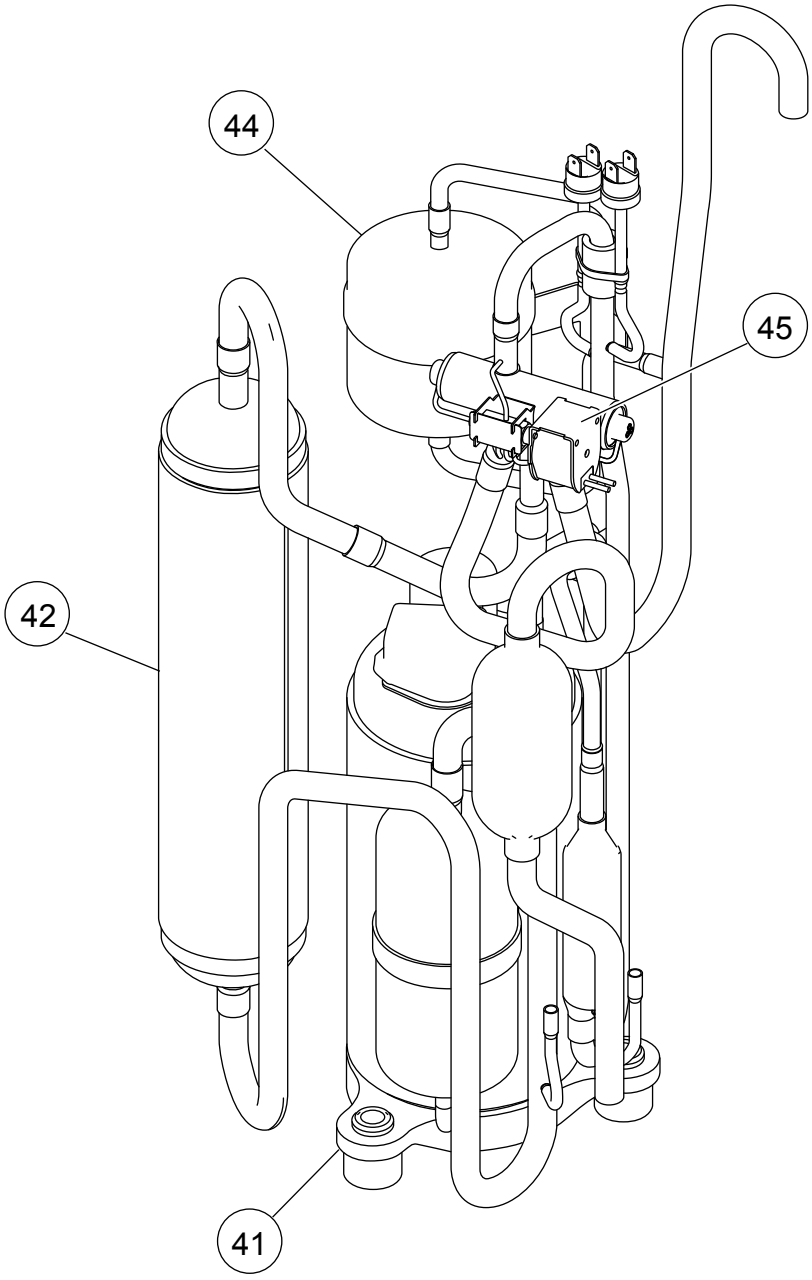


OUTDOOR UNIT

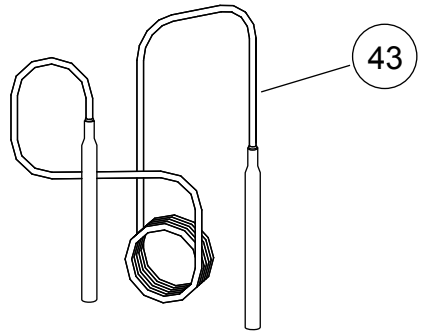


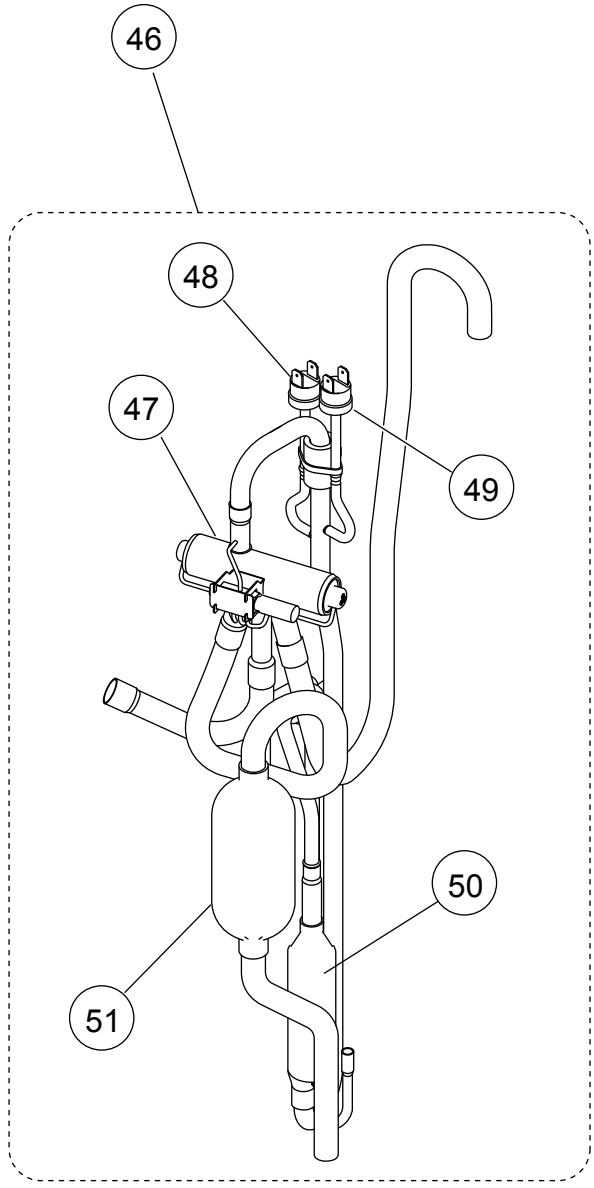


| Ref. | Description | Part number | |
|---|---|---|---|
| 41 | Compressor Assy | 9377946010 | |
| 42 | Accumulator Sub Assy | 9374426072 | |
| 43 | Capillary Assy | 9372197370 | |
| 44 | Receiver Tank Sub Assy | 9373426028 | |
| 45 | Solenoid | 9900165055 | |
| 46 | 4-way Valve Sub Assy | 9374425204 | |
| 47 | 4-way Valve | 9900164010 | |
| 48 | Pressure Switch | 9900186012 | |
| 49 | Pressure Switch | 9900341015 | |
| 50 | Discharge Pipe Assy | 9372264225 | |
| 51 | Joint Pipe (Valve) E Assy | 9379802000 | |

OUTDOOR UNIT

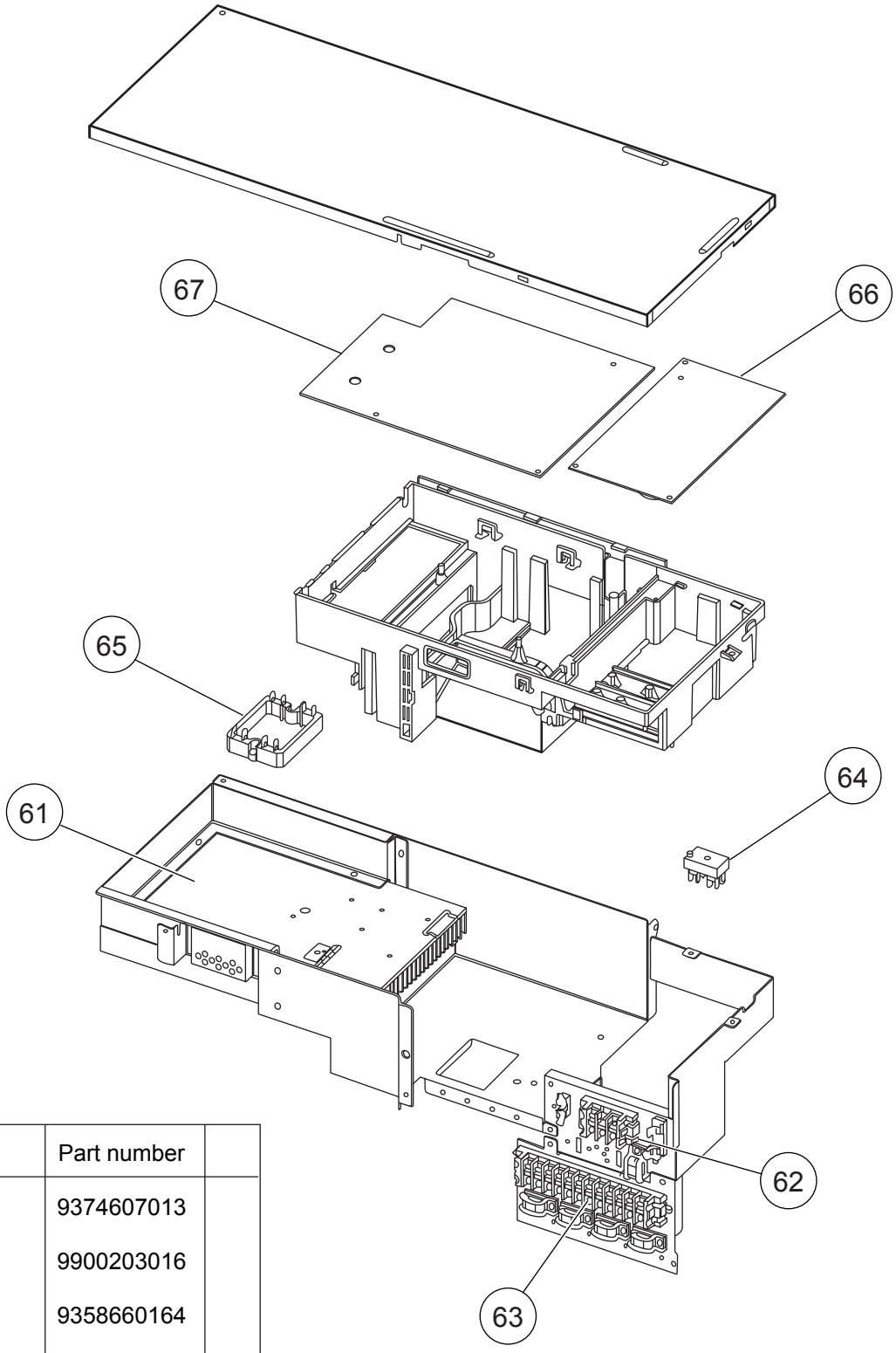


| Ref. | Description | Part number | |
|---|---|---|---|
| 61 | Heat Sink A | 9374607013 | |
| 62 | Terminal (3P) | 9900203016 | |
| 63 | Terminal (12P) | 9358660164 | |
| 64 | Terminal | 9900433017 | |
| 65 | ACTPM | 9703457012 | |
| 66 | Power Supply PCB Assy | 9705647039 | |
| 67 | Controller PCB Assy | 9709091197 | |
| 68 | Heat Sink Thermistor | 9900311018 | |
| 69 | Discharge Thermistor (Comp) | 9900620004 | |
| 70 | Thermistor (Outdoor) | 9900477035 | |
| 71 | Heat Exchanger Thermistor | 9900540005 | |
| 72 | Discharge Pipe Thermistor | 9900621001 | |

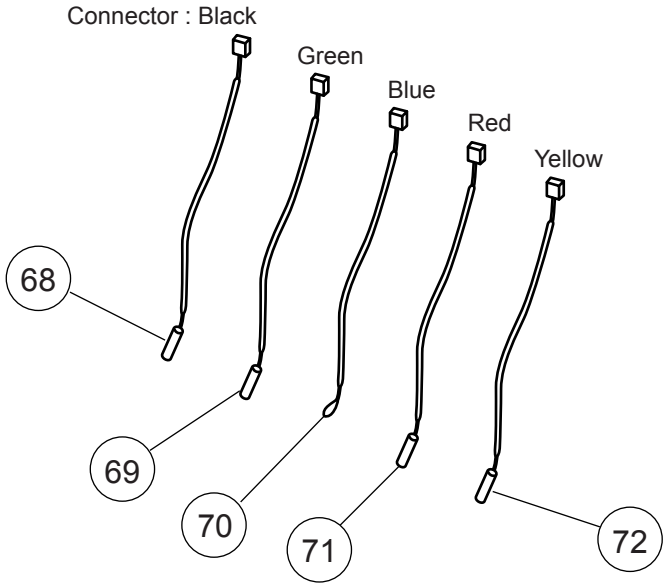

# PARTS

INDOOR UNIT
COMPACT WALL MOUNTED
ASAG07LJCA
ASAG09LJCA
ASAG12LJCA

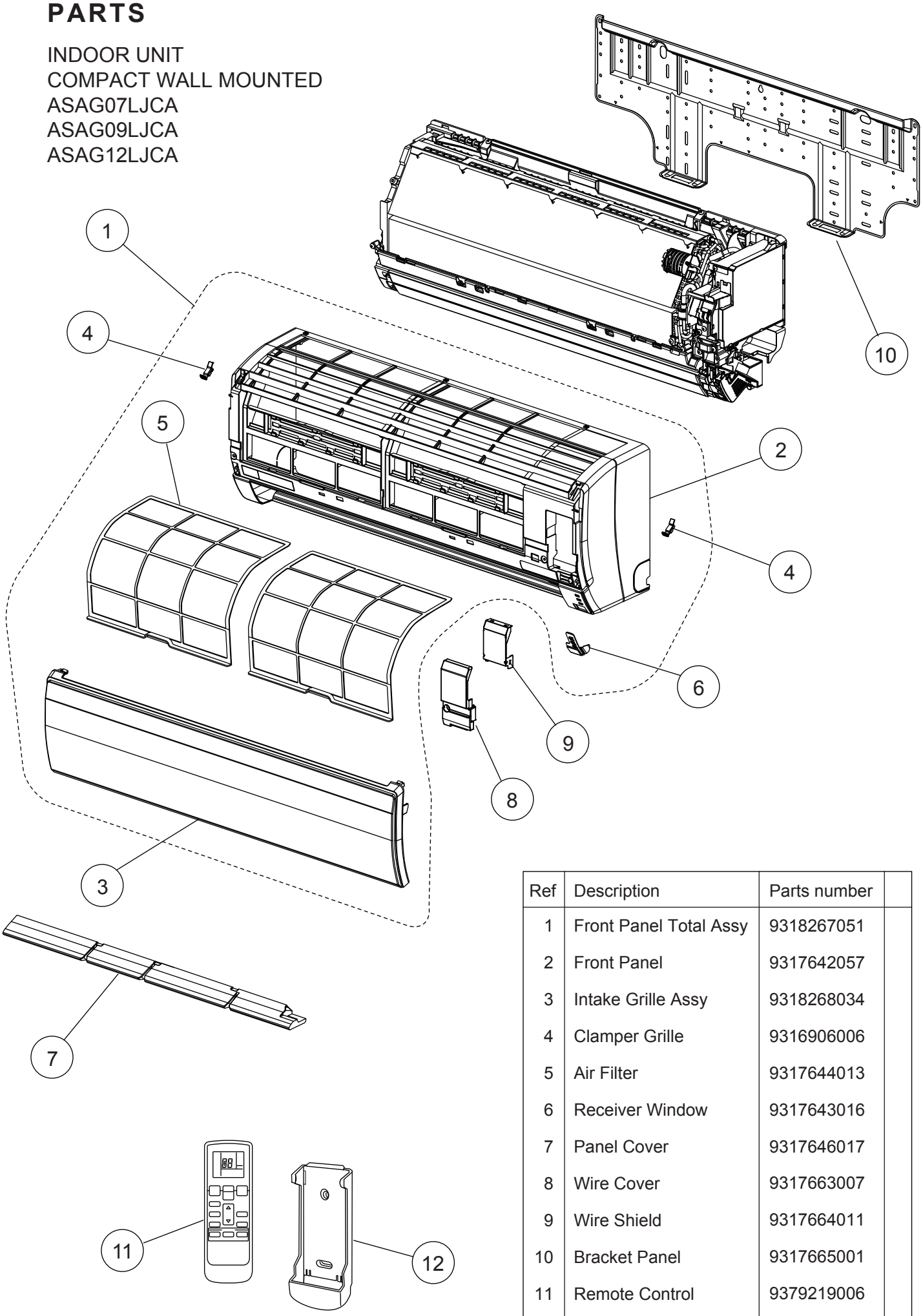


| Ref | Description | Parts number | |
|---|---|---|---|
| 1 | Front Panel Total Assy | 9318267051 | |
| 2 | Front Panel | 9317642057 | |
| 3 | Intake Grille Assy | 9318268034 | |
| 4 | Clamper Grille | 9316906006 | |
| 5 | Air Filter | 9317644013 | |
| 6 | Receiver Window | 9317643016 | |
| 7 | Panel Cover | 9317646017 | |
| 8 | Wire Cover | 9317663007 | |
| 9 | Wire Shield | 9317664011 | |
| 10 | Bracket Panel | 9317665001 | |
| 11 | Remote Control | 9379219006 | |
| 12 | Remote Control Holder | 9305642045 | |

INDOOR UNIT
COMPACT WALL MOUNTED
ASAG07LJCA
ASAG09LJCA
ASAG12LJCA

| Ref | Description | Parts number | |
|---|---|---|---|
| 21 | Evaporator Total Assy | 9317820011 | |
| 22 | Joint Pipe Assy | 9317838009 | |
| 23 | Filter Guide | 9317652001 | |
| 24 | Rear Bracket | 9317651004 | |
| 25 | Evaporator Holder R | 9317650007 | |
| 26 | Evaporator Holder L | 9317649001 | |
| 27 | Holder (Room Thermistor) | 9316895003 | |
| 28 | Thermistor Assy | 9900563004 | |

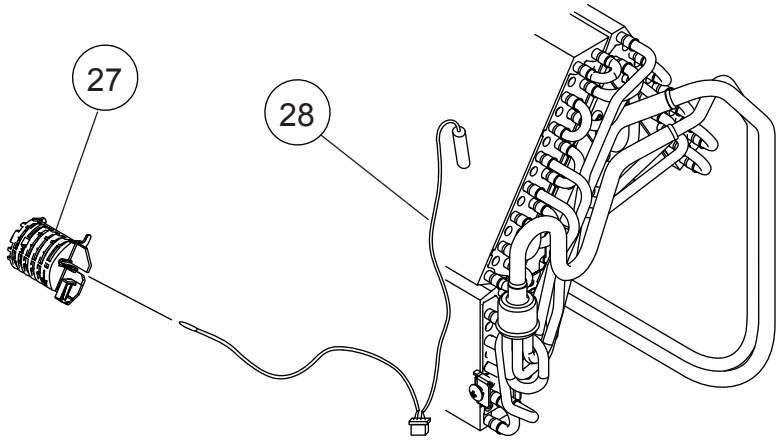

INDOOR UNIT
COMPACT WALL MOUNTED
ASAG07LJCA
ASAG09LJCA
ASAG12LJCA

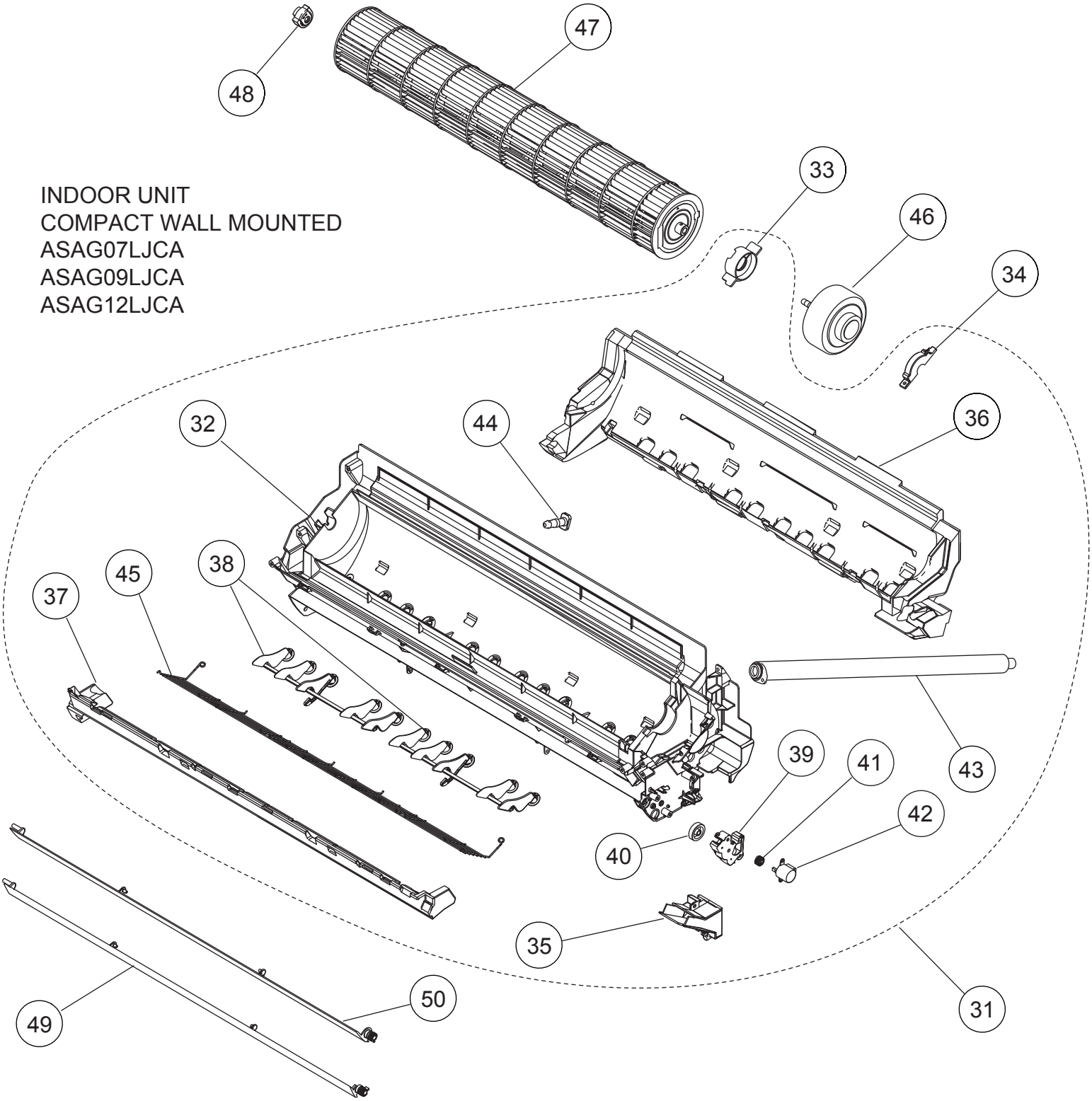


| Ref | Description | Parts number | |
|---|---|---|---|
| 31 | Casing Assy | 9318264050 | |
| 32 | Casing | 9317647014 | |
| 33 | Motor Cover | 9316568006 | |
| 34 | Motor Cover | 9316601000 | |
| 35 | Cable Guide | 9316567009 | |
| 36 | Casing Cover B | 9317653015 | |
| 37 | Casing Cover F | 9317654005 | |
| 38 | R AND L Louver B | 9316961012 | |
| 39 | Louver Gear Holder | 9317669016 | |
| 40 | Louver Gear | 9317648004 | |

| Ref | Description | Parts number | |
|---|---|---|---|
| 41 | Gear A | 9309994003 | |
| 42 | Motor Step | 9900384128 | |
| 43 | Drain Hose Assy | 9316904002 | |
| 44 | Drain Cap | 9316177017 | |
| 45 | Fan Guard | 9332277005 | |
| 46 | Motor, DC Brushless | 9602704002 | |
| 47 | Crossflow Fan Assy | 9316830004 | |
| 48 | Bearing C Assy | 9306628017 | |
| 49 | Louver U | 9317656016 | |
| 50 | Louver Z | 9317657006 | |

INDOOR UNIT
COMPACT WALL MOUNTED
ASAG07LJCA
ASAG09LJCA
ASAG12LJCA

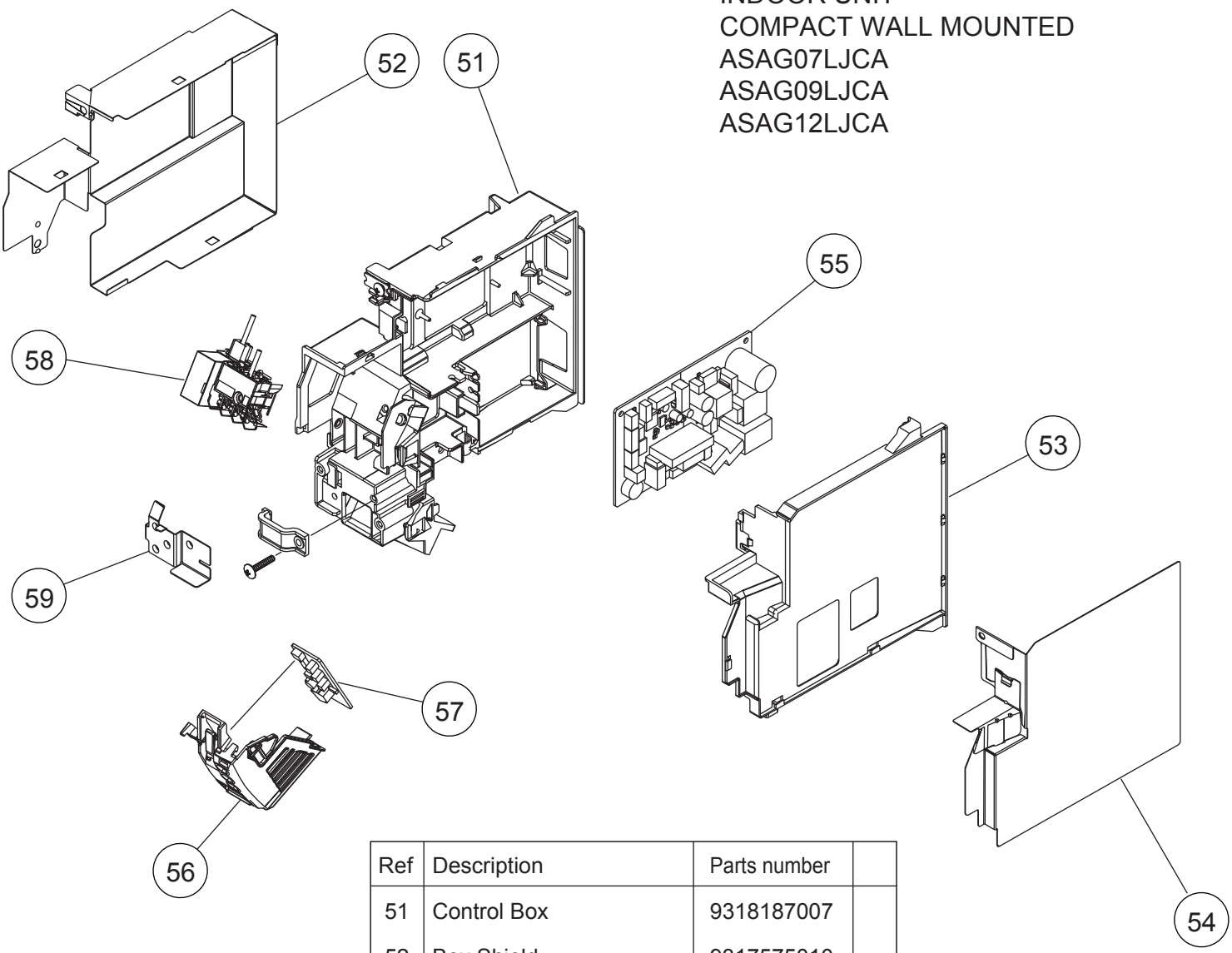


| Ref | Description | Parts number | |
|---|---|---|---|
| 51 | Control Box | 9318187007 | |
| 52 | Box Shield | 9317575010 | |
| 53 | Control Cover | 9317659017 | |
| 54 | Cover Shield | 9317923002 | |
| 55 | Controller PCB Assy (07) | 9708536224 | |
| 55 | Controller PCB Assy (09) | 9708536231 | |
| 55 | Controller PCB Assy (12) | 9708536248 | |
| 56 | Display Case | 9317662000 | |
| 57 | Display PCB Assy | 9707649024 | |
| 58 | Terminal | 9900638009 | |
| 59 | Earth Terminal | 9316586000 | |

INDOOR UNIT
COMPACT WALL MOUNTED
ASYG07LUCA
ASYG09LUCA
ASYG12LUCA

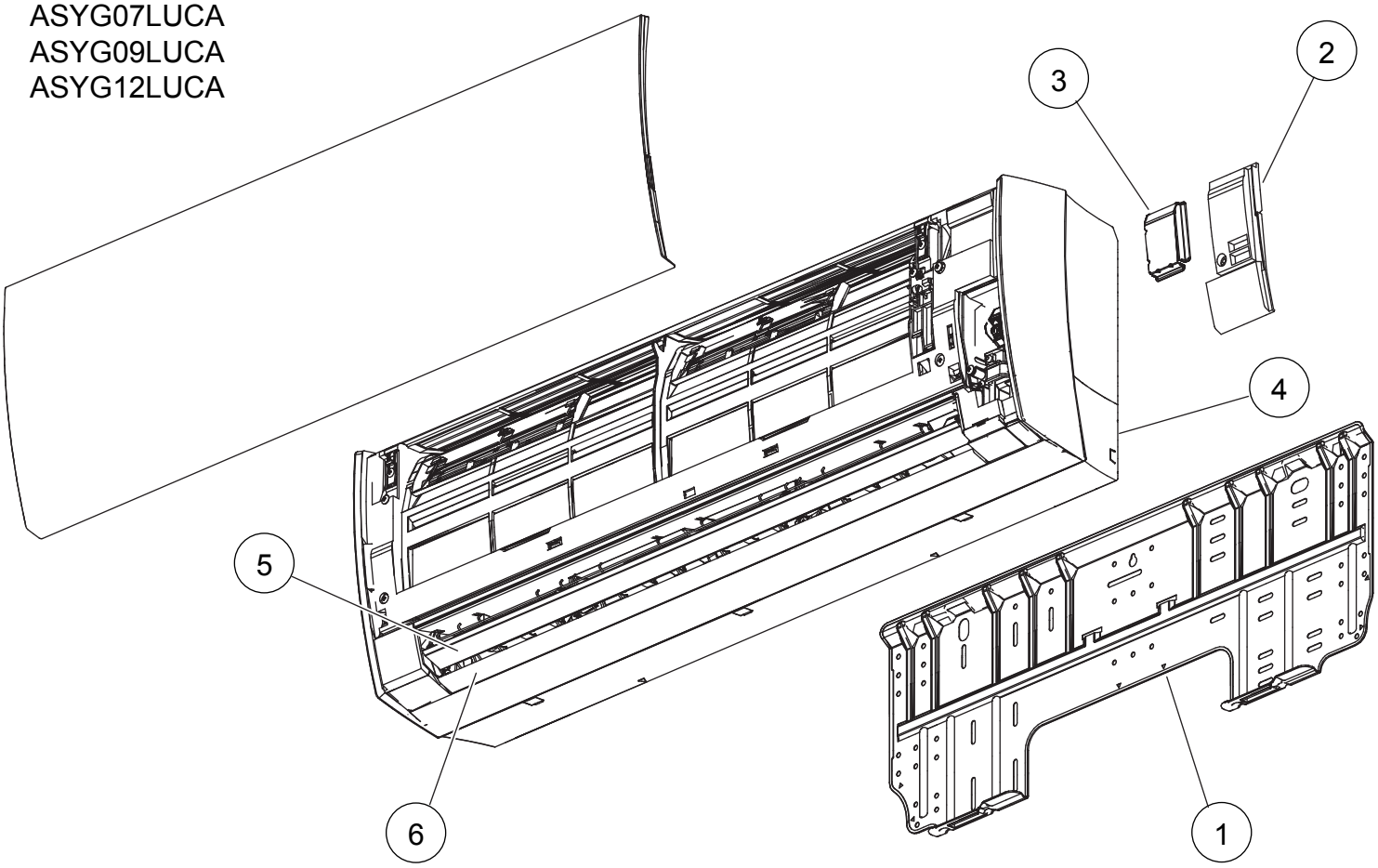


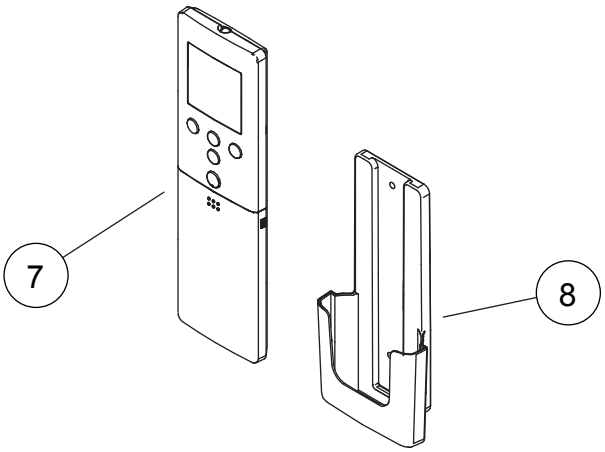


| Ref. | Description | Part number | |
|---|---|---|---|
| 1 | Bracket Panel | 9318913002 | |
| 2 | Wire Cover | 9318911008 | |
| 3 | Wire Shield | 9318919004 | |
| 4 | Under Cover | 9318879001 | |
| 5 | Louver U (Upper) | 9318880007 | |
| 6 | Louver Z (Lower) | 9318881004 | |
| 7 | Remote Control | 9319207018 | |
| 8 | Remote Control Holder | 9318912005 | |

INDOOR UNIT
COMPACT WALL MOUNTED
ASYG07LUCA
ASYG09LUCA
ASYG12LUCA
Front panel

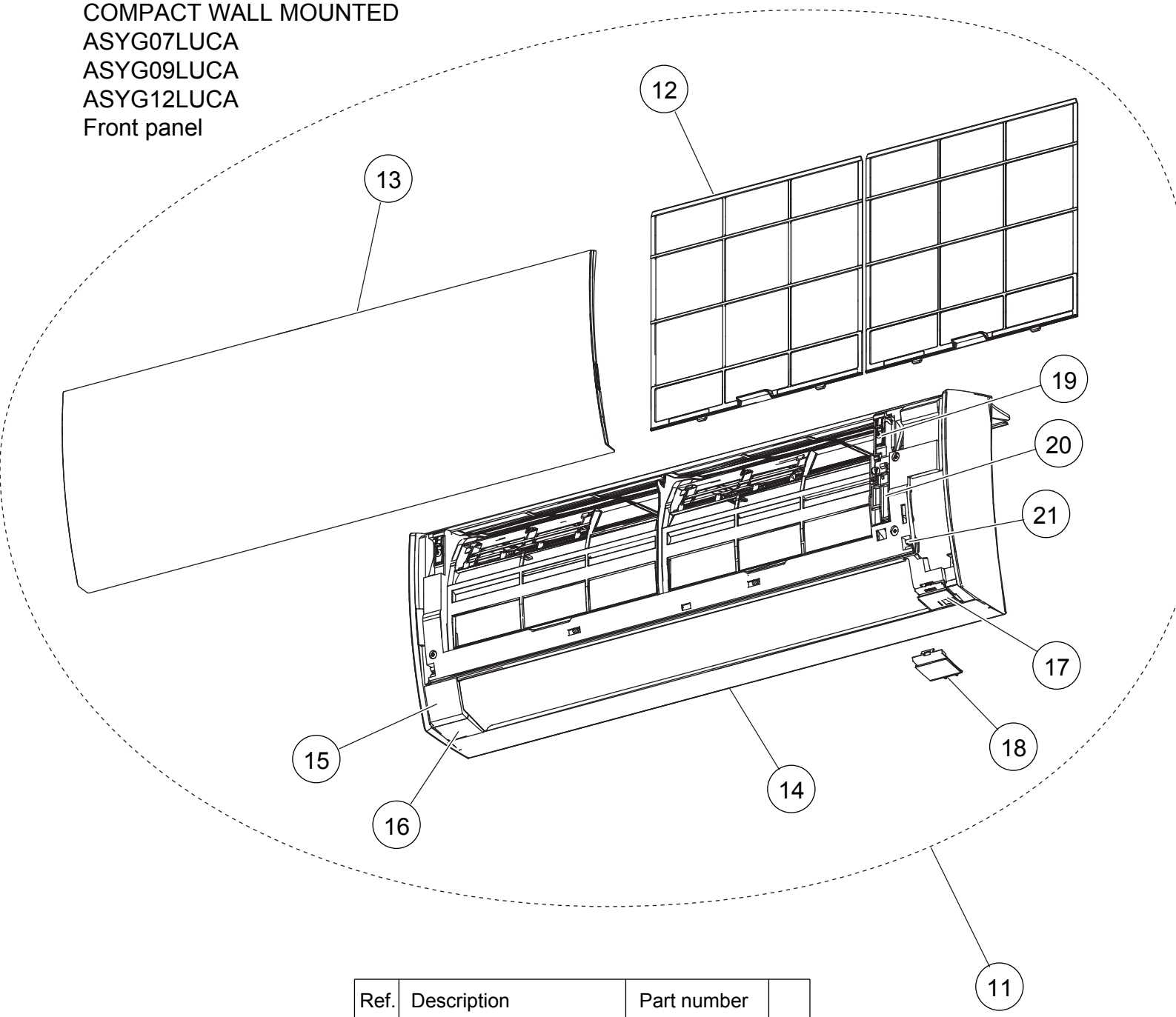


| Ref. | Description | Part number | |
|---|---|---|---|
| 11 | Front Panel Total Assy | 9319348001 | |
| 12 | Air Filter | 9318883008 | |
| 13 | Intake Grille Assy | 9319351155 | |
| 14 | Front Panel | 9318876000 | |
| 15 | Front Panel Cover U | 9318910001 | |
| 16 | Display Plate Holder L | 9318894004 | |
| 17 | Display Plate Holder R | 9318895001 | |
| 18 | Display Plate R | 9318893007 | |
| 19 | Arm Cover | 9318900002 | |
| 20 | Grille Stay | 9318899009 | |
| 21 | Grille Clamper B | 9316951006 | |

INDOOR UNIT
COMPACT WALL MOUNTED
ASYG07LUCA
ASYG09LUCA
ASYG12LUCA
Evaporator

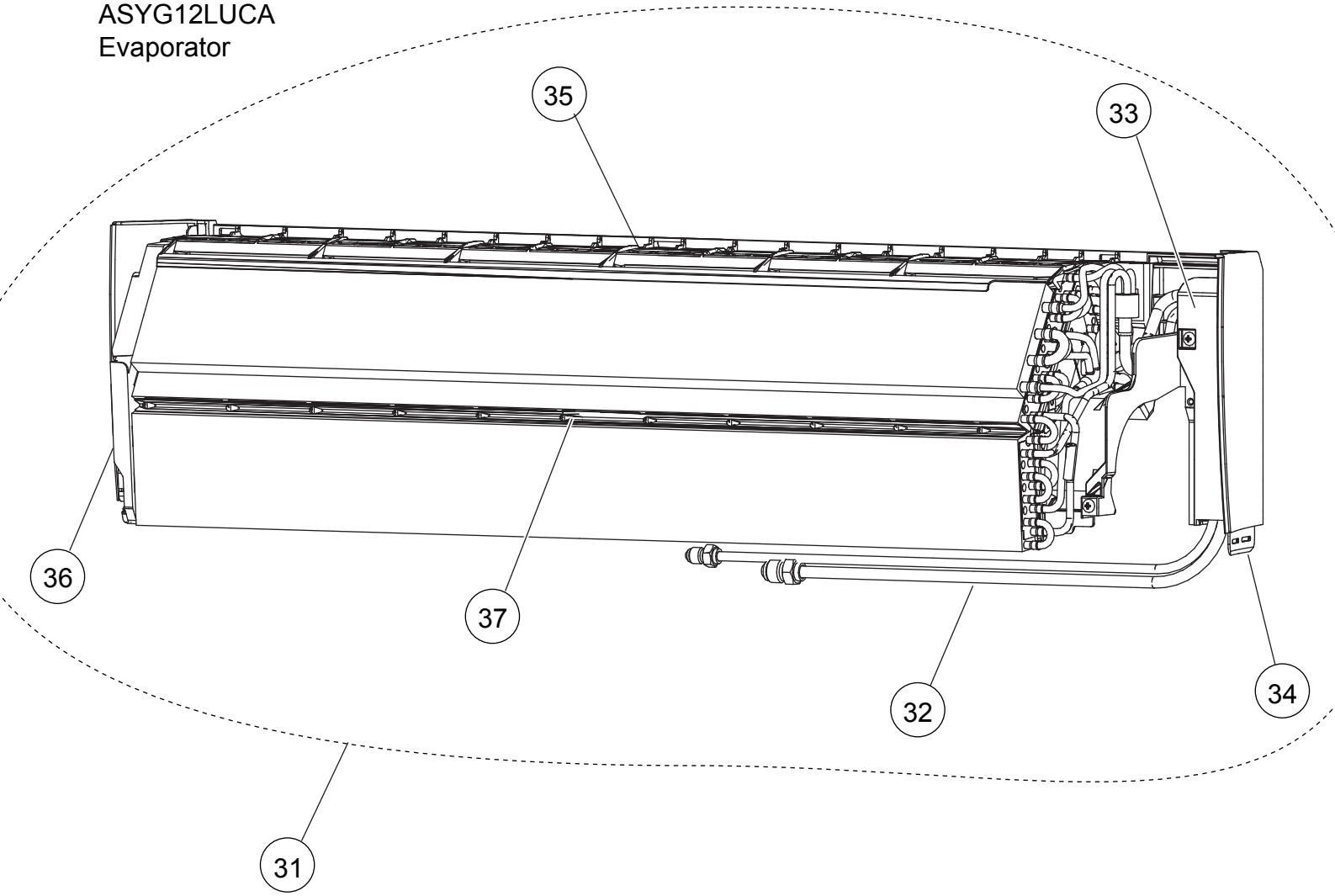


| Ref. | Description | Part number | |
|---|---|---|---|
| 31 | Evaporator Total Assy | 9319327006 | |
| 32 | Joint Pipe Assy | 9319322001 | |
| 33 | Joint Pipe Holder | 9318901009 | |
| 34 | Base | 9318874006 | |
| 35 | Filter Guide | 9318887006 | |
| 36 | Evaporator Holder L | 9318875003 | |
| 37 | Air Seal | 9319295008 | |

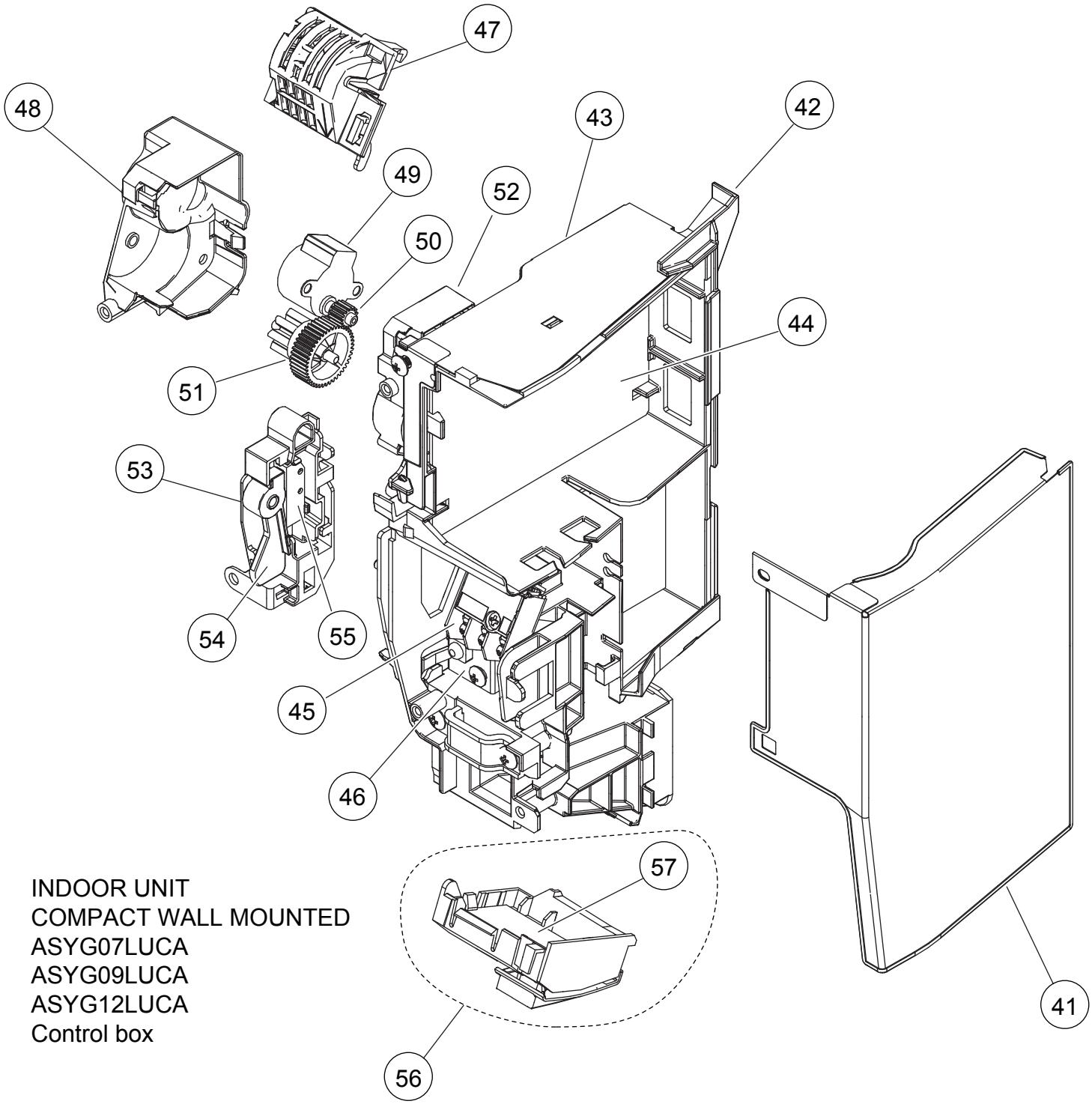


INDOOR UNIT
COMPACT WALL MOUNTED
ASYG07LUCA
ASYG09LUCA
ASYG12LUCA
Control box

| Ref. | Description | Part number | |
|---|---|---|---|
| 41 | Cover Shield A | 9318916003 | |
| 42 | Control Box | 9318882001 | |
| 43 | Box Shield Assy | 9319344003 | |
| 44 | Controller PCB Assy (07) | 9708713014 | |
| 44 | Controller PCB Assy (09) | 9708713021 | |
| 44 | Controller PCB Assy (12) | 9708713038 | |
| 45 | Terminal | 9900638009 | |
| 46 | Earth Terminal | 9318918007 | |
| 47 | Room Thermistor Holder | 9319068008 | |
| 48 | Gear Cover | 9318902006 | |

| Ref. | Description | Part number | |
|---|---|---|---|
| 49 | Step Motor | 9900384166 | |
| 50 | Gear B | 9319294001 | |
| 51 | Panel Gear | 9319293004 | |
| 52 | Gear Case | 9318903003 | |
| 53 | Switch Case | 9319332000 | |
| 54 | Grille Key Top | 9319334004 | |
| 55 | Micro Switch | 9900625009 | |
| 56 | Display Assy | 9708823010 | |
| 57 | Display PCB Assy | 9708824017 | |
| -- | Thermistor Assy | 9900627003 | |

INDOOR UNIT
COMPACT WALL MOUNTED
ASYG07LUCA
ASYG09LUCA
ASYG12LUCA
Casing assy

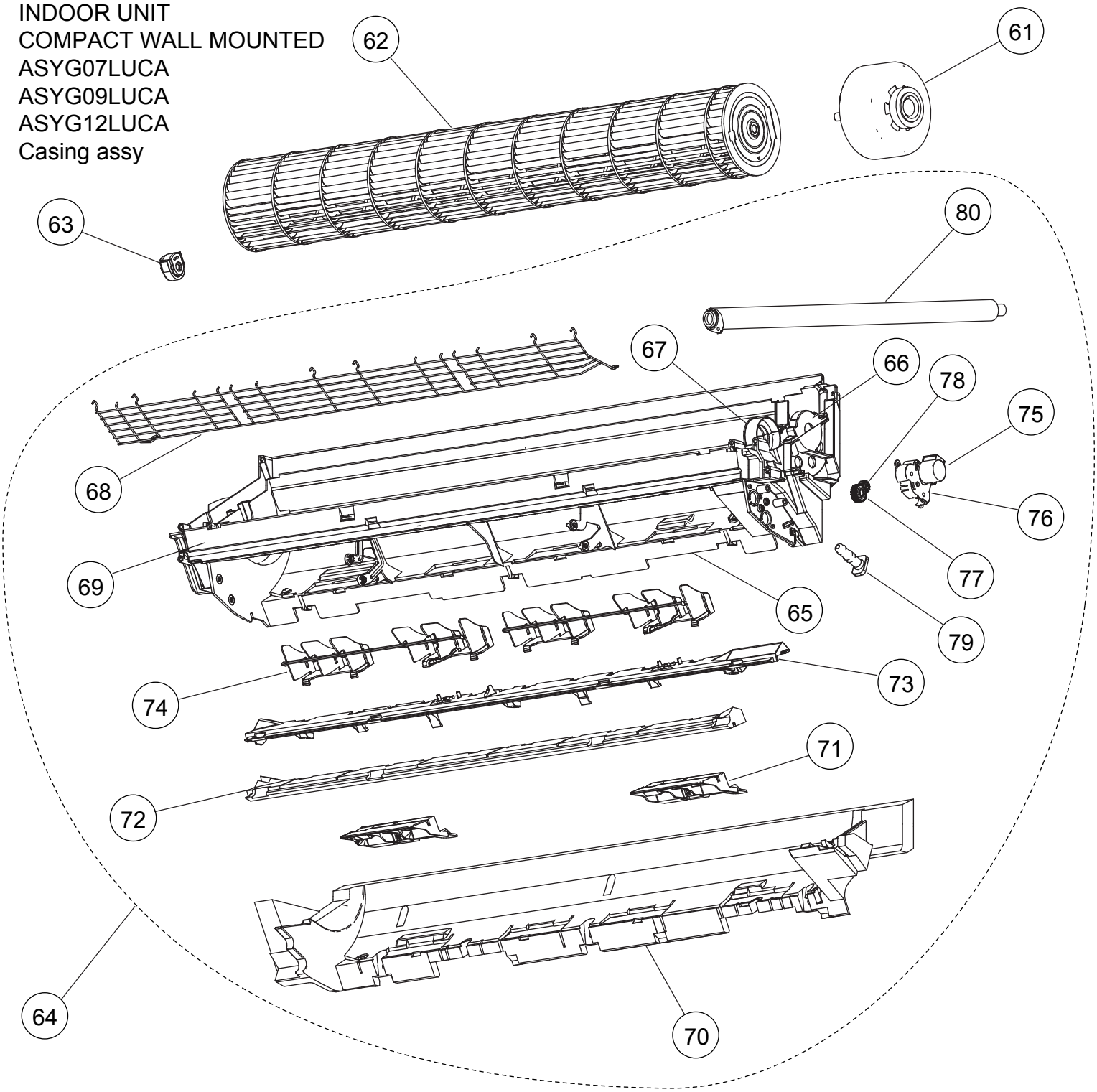


| Ref. | Description | Part number | |
|---|---|---|---|
| 61 | Fan Motor | 9602947003 | |
| 62 | Crossflow Fan Assy | 9319361000 | |
| 63 | Bearing C Assy | 9306628017 | |
| 64 | Casing Assy | 9319342009 | |
| 65 | Casing | 9318873009 | |
| 66 | Motor Cover | 9316601000 | |
| 67 | Motor Cover | 9318888003 | |
| 68 | Fan Guard | 9318924008 | |
| 69 | Casing Cover F | 9318923001 | |
| 70 | Casing Cover B | 9318920000 | |

| Ref. | Description | Part number | |
|---|---|---|---|
| 71 | Pipe Bracket | 9318889000 | |
| 72 | Panel Cover | 9319296005 | |
| 73 | Louver Holder | 9318886009 | |
| 74 | R and L Louver | 9318885002 | |
| 75 | Motor Step | 9900384128 | |
| 76 | Louver Gear Holder | 9318905007 | |
| 77 | Louver Gear | 9318904000 | |
| 78 | Gear A | 9309994003 | |
| 79 | Drain Cap | 9316177017 | |
| 80 | Drain Hose Assy | 9316904002 | |

INDOOR UNIT
WALL MOUNTED
ASAG18LFCA
ASAG24LFCA

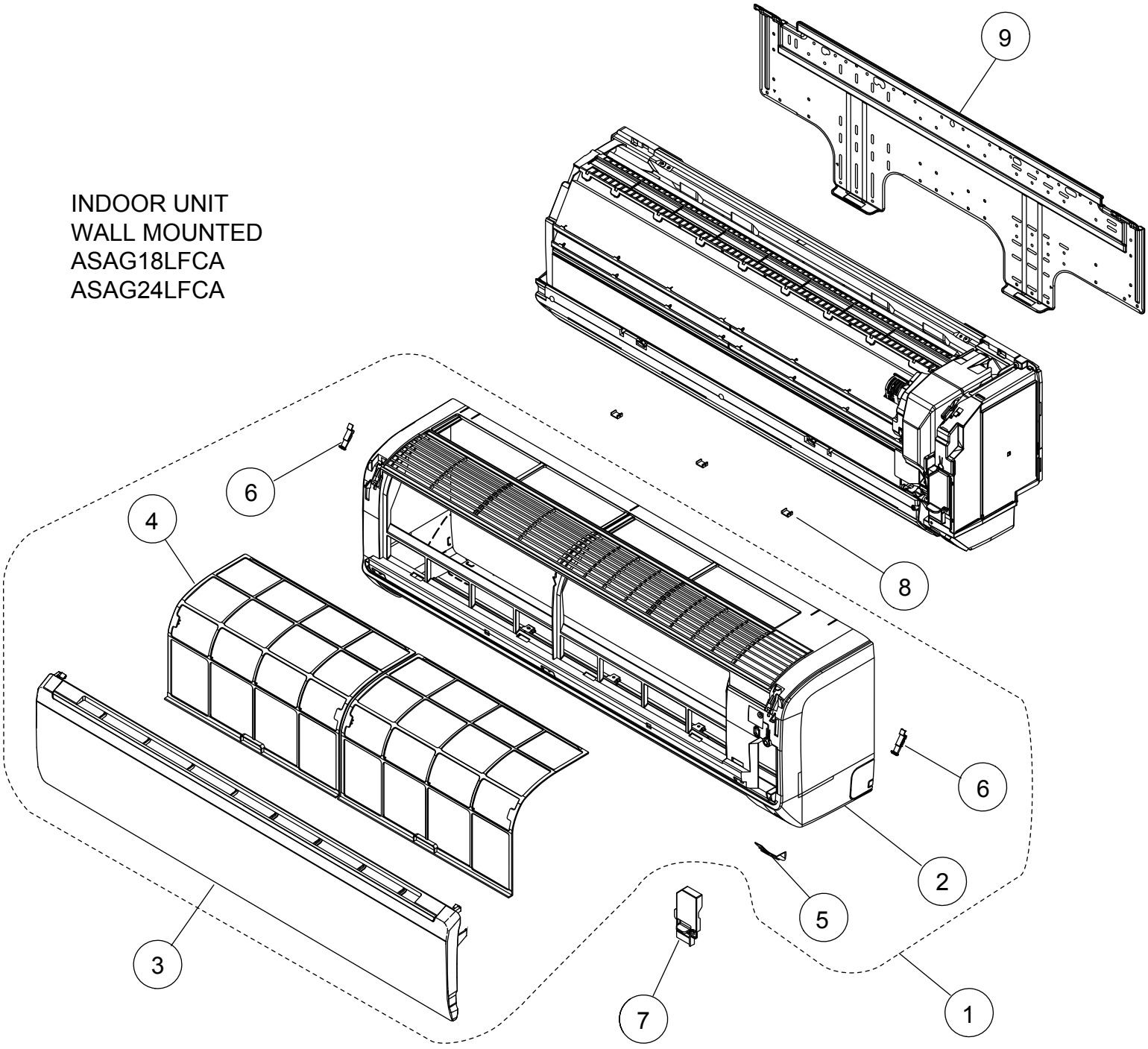


| Ref | Description | Parts number | |
|---|---|---|---|
| 1 | Front Panel Total Assy | 9318738001 | |
| 2 | Front Panel | 9314991080 | |
| 3 | Intake Grille Assy | 9385985049 | |
| 4 | Air Filter | 9315014016 | |
| 5 | Receiver Window | 9315010018 | |
| 6 | Clamper Grille | 9306755010 | |
| 7 | Wire Clamper | 9315015013 | |
| 8 | Cap (Screw) | 9309002050 | |
| 9 | Bracket Panel | 9315023018 | |
| 10 | Remote Control | 9379219037 | |
| 11 | Remote Control Holder | 9305642045 | |

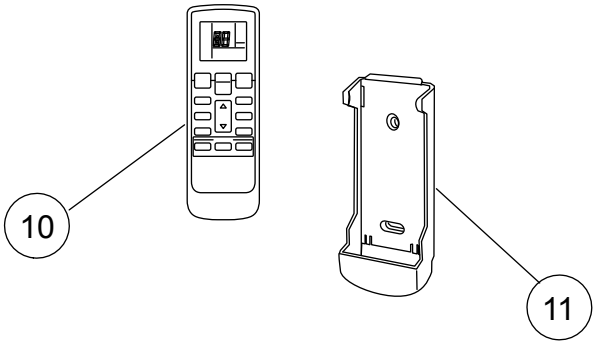

INDOOR UNIT
WALL MOUNTED
ASAG18LFCA
ASAG24LFCA

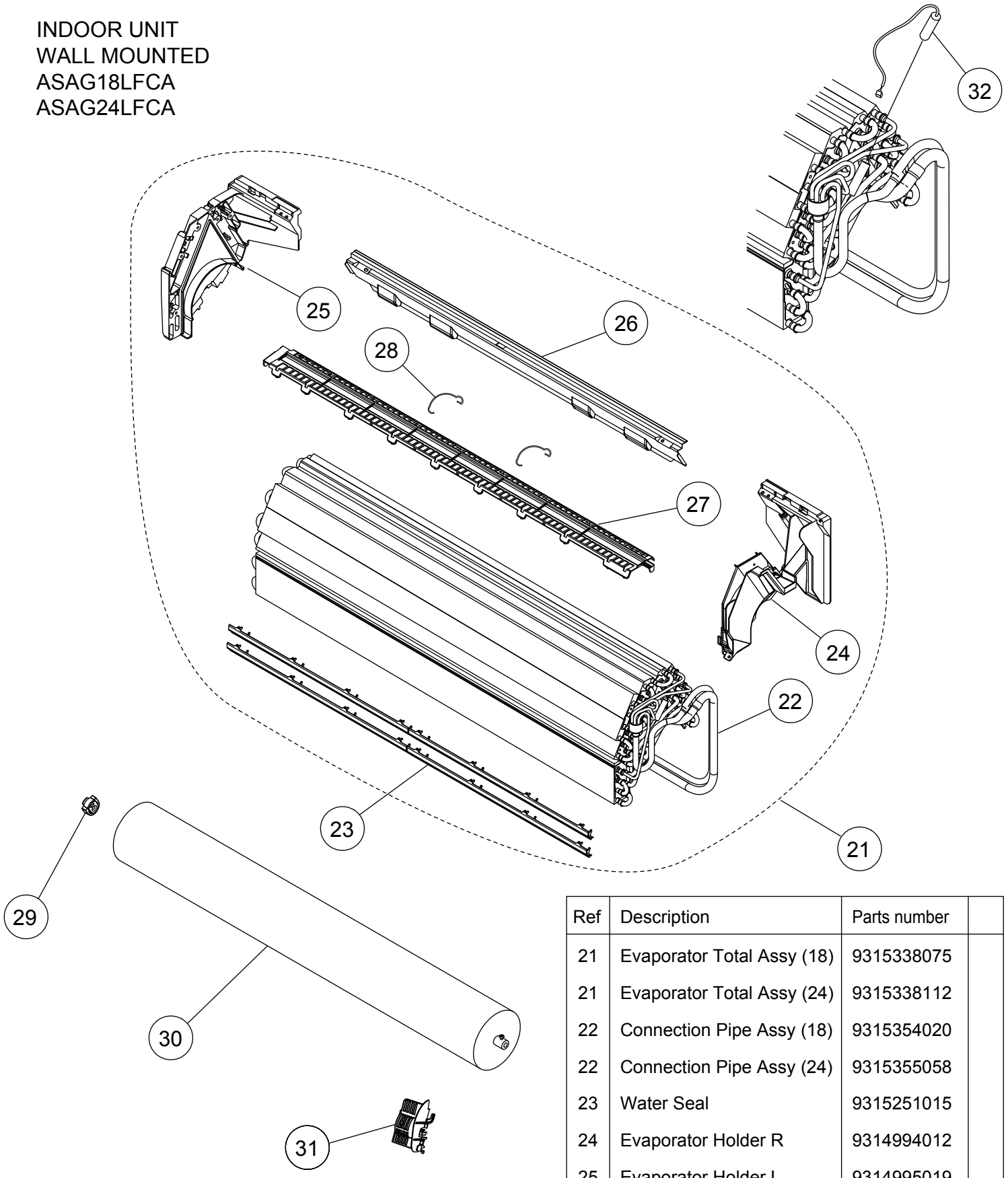


| Ref | Description | Parts number | |
|---|---|---|---|
| 21 | Evaporator Total Assy (18) | 9315338075 | |
| 21 | Evaporator Total Assy (24) | 9315338112 | |
| 22 | Connection Pipe Assy (18) | 9315354020 | |
| 22 | Connection Pipe Assy (24) | 9315355058 | |
| 23 | Water Seal | 9315251015 | |
| 24 | Evaporator Holder R | 9314994012 | |
| 25 | Evaporator Holder L | 9314995019 | |
| 26 | Rear Bracket | 9315022011 | |
| 27 | Filter Guide | 9315013019 | |
| 28 | Filter Guard | 9315411013 | |
| 29 | Bearing C Assy | 9306628017 | |
| 30 | Crossflow Fan Assy | 9315024015 | |
| 31 | Holder (Room Thermistor) | 9315252012 | |
| 32 | Pipe Thermistor | 9900551018 | |

INDOOR UNIT
WALL MOUNTED
ASAG18LFCA
ASAG24LFCA

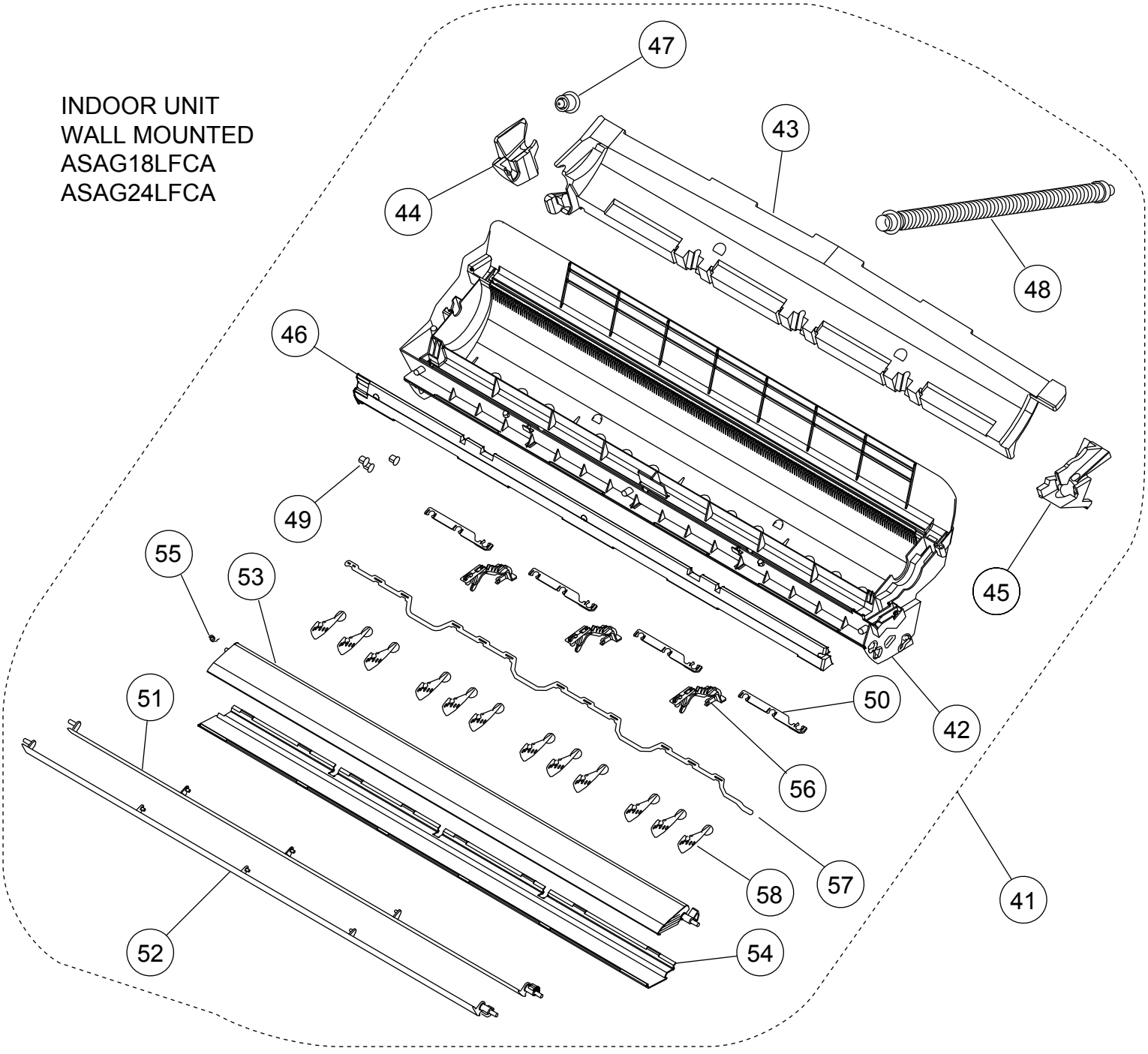


| Ref | Description | Parts number | |
|---|---|---|---|
| 41 | Casing Assy (18) | 9315331038 | |
| 41 | Casing Assy (24) | 9315331045 | |
| 42 | Casing | 9314993015 | |
| 43 | Casing Cover B | 9315016010 | |
| 44 | Casing Cover L | 9315017017 | |
| 45 | Casing Cover R | 9315018014 | |
| 46 | Casing Cover F | 9315019011 | |
| 47 | Drain Cap | 9367677009 | |
| 48 | Drain Hose Assy | 9315769015 | |
| 49 | Bush B | 9312156016 | |
| 50 | Spacer B | 9312441013 | |

| Ref | Description | Parts number | |
|---|---|---|---|
| 51 | Louver U | 9315000019 | |
| 52 | Louver Z | 9315001016 | |
| 53 | Diffuser U | 9315002013 | |
| 54 | Diffuser Z | 9315003010 | |
| 55 | Spring C | 9314142017 | |
| 56 | Piller A | 9315009012 | |
| 57 | Joint B | 9315006011 | |
| 58 | R and L Louver | 9311997016 | |
| - | Fan Guard | 9305751051 | |
| - | Fan Guard Holder Right | 9315814012 | |
| - | Fan Guard Holder Left | 9315815019 | |

INDOOR UNIT
WALL MOUNTED
ASAG18LFCA
ASAG24LFCA

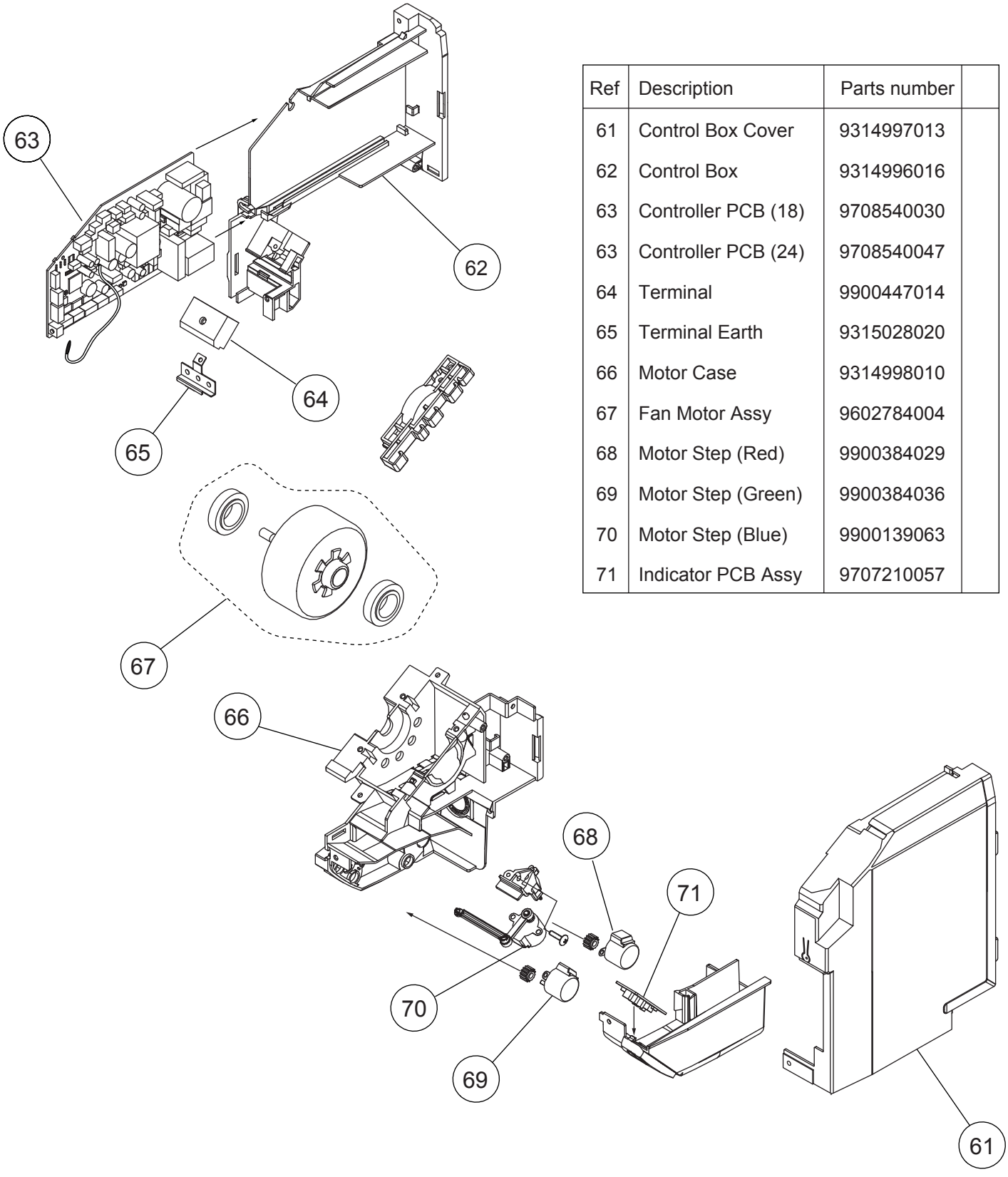


| Ref | Description | Parts number | |
|---|---|---|---|
| 61 | Control Box Cover | 9314997013 | |
| 62 | Control Box | 9314996016 | |
| 63 | Controller PCB (18) | 9708540030 | |
| 63 | Controller PCB (24) | 9708540047 | |
| 64 | Terminal | 9900447014 | |
| 65 | Terminal Earth | 9315028020 | |
| 66 | Motor Case | 9314998010 | |
| 67 | Fan Motor Assy | 9602784004 | |
| 68 | Motor Step (Red) | 9900384029 | |
| 69 | Motor Step (Green) | 9900384036 | |
| 70 | Motor Step (Blue) | 9900139063 | |
| 71 | Indicator PCB Assy | 9707210057 | |

DECORATION PANEL
UTG-UFYD-W

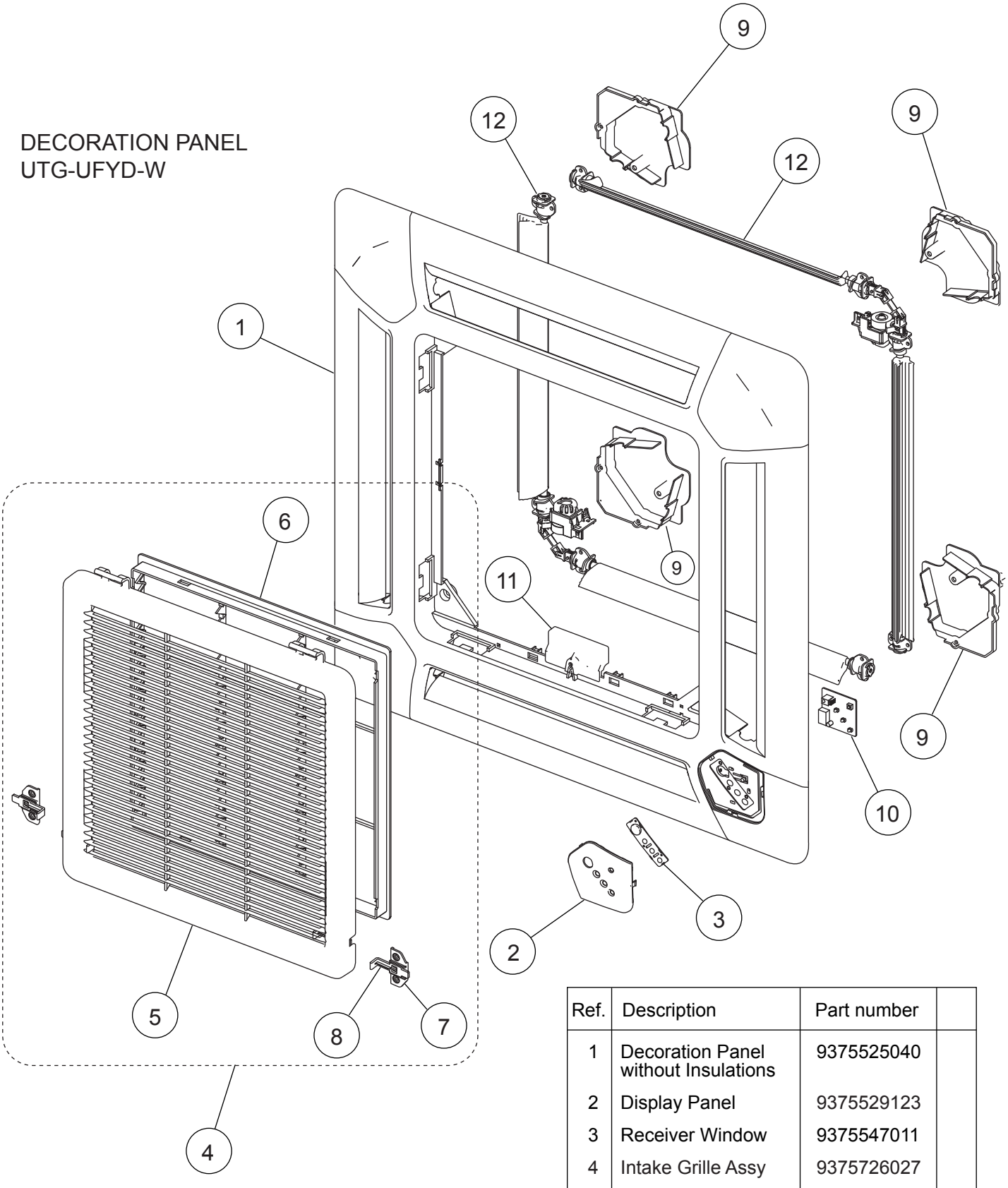


| Ref. | Description | Part number | |
|---|---|---|---|
| 1 | Decoration Panel without Insulations | 9375525040 | |
| 2 | Display Panel | 9375529123 | |
| 3 | Receiver Window | 9375547011 | |
| 4 | Intake Grille Assy | 9375726027 | |
| 5 | Intake Grille | 9375531027 | |
| 6 | Long Life Filter | 9375533014 | |
| 7 | Hook Bracket | 9375546014 | |
| 8 | Grille Hook | 9375532024 | |
| 9 | Panel Cover without Insulations | 9375530013 | |
| 10 | Indicator PCB Assy | 9707371031 | |
| 11 | Connector Cover | 9375549015 | |
| 12 | Flap Total Assy | 9377760029 | |

DECORATION PANEL
UTG-UFYD-W

Flap total assy
Motor holder assy

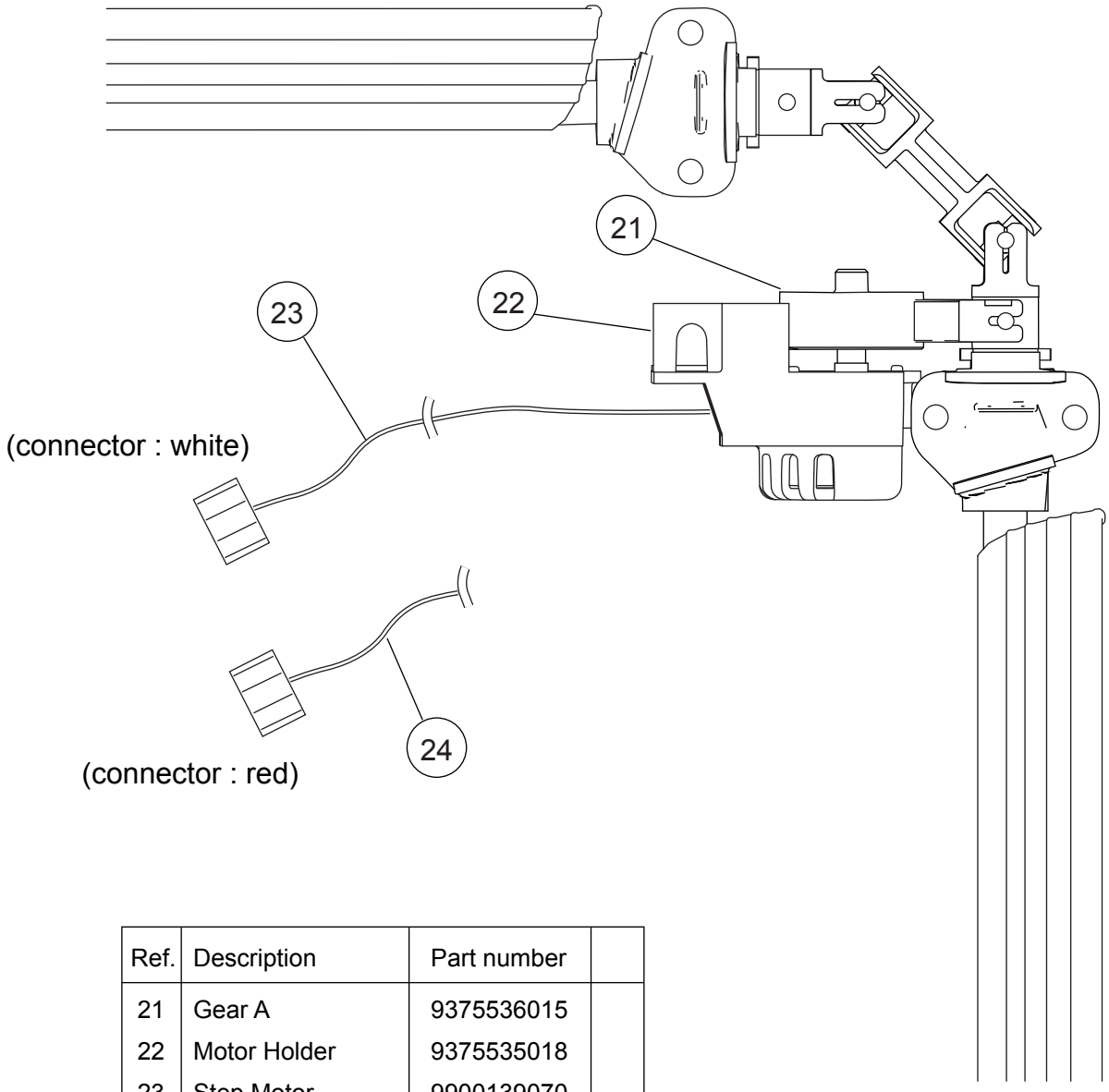


| Ref. | Description | Part number | |
|---|---|---|---|
| 21 | Gear A | 9375536015 | |
| 22 | Motor Holder | 9375535018 | |
| 23 | Step Motor (white connector) | 9900139070 | |
| 24 | Step Motor (red connector) | 9900139087 | |

INDOOR UNIT
COMPACT CASSETTE
AUAG09LVLA
AUAG12LVLA
AUAG14LVLA
AUAG18LVLA

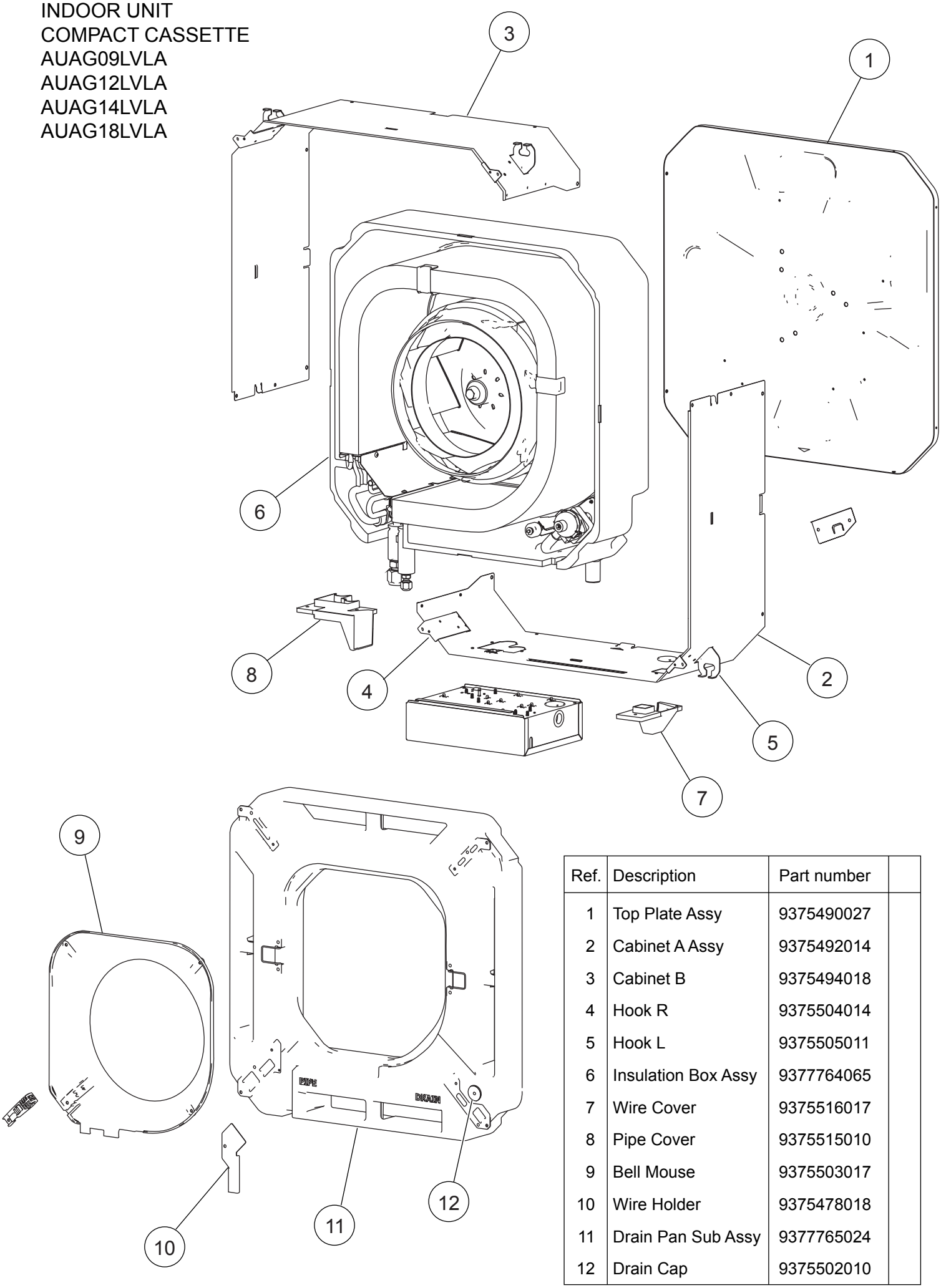


| Ref. | Description | Part number | |
|---|---|---|---|
| 1 | Top Plate Assy | 9375490027 | |
| 2 | Cabinet A Assy | 9375492014 | |
| 3 | Cabinet B | 9375494018 | |
| 4 | Hook R | 9375504014 | |
| 5 | Hook L | 9375505011 | |
| 6 | Insulation Box Assy | 9377764065 | |
| 7 | Wire Cover | 9375516017 | |
| 8 | Pipe Cover | 9375515010 | |
| 9 | Bell Mouse | 9375503017 | |
| 10 | Wire Holder | 9375478018 | |
| 11 | Drain Pan Sub Assy | 9377765024 | |
| 12 | Drain Cap | 9375502010 | |

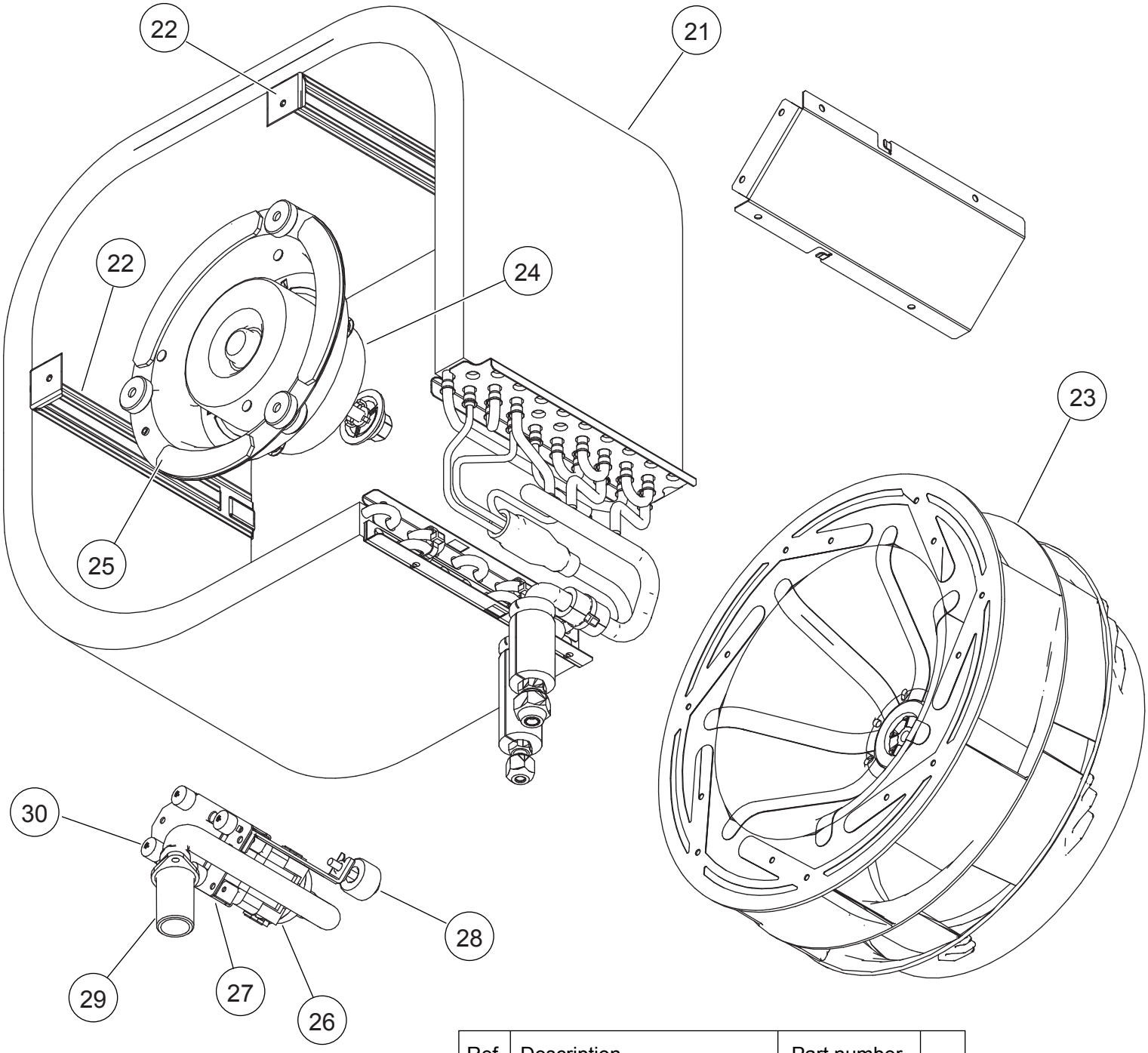


INDOOR UNIT
COMPACT CASSETTE
AUAG09LVLA
AUAG12LVLA
AUAG14LVLA
AUAG18LVLA

| Ref. | Description | Part number | |
|---|---|---|---|
| 21 | Evaporator Total Assy (09, 12) | 9375720032 | |
| 21 | Evaporator Total Assy (14, 18) | 9375720070 | |
| 22 | Evaporator Holder | 9375508012 | |
| 23 | 2 Stage Turbo Fan Assy | 9375480011 | |
| 24 | Fan Motor | 9602436019 | |
| 25 | Fan Motor Holder | 9375552015 | |
| 26 | Pump Assy | 9900472030 | |
| 27 | Drain Pump Holder B | 9375518011 | |
| 28 | Float Switch | 9900361037 | |
| 29 | Drain Port Sub Assy | 9375718015 | |
| 30 | Rubber (Pump) | 9378426016 | |

INDOOR UNIT
COMPACT CASSETTE
AUAG09LVLA
AUAG12LVLA
AUAG14LVLA
AUAG18LVLA
Control unit

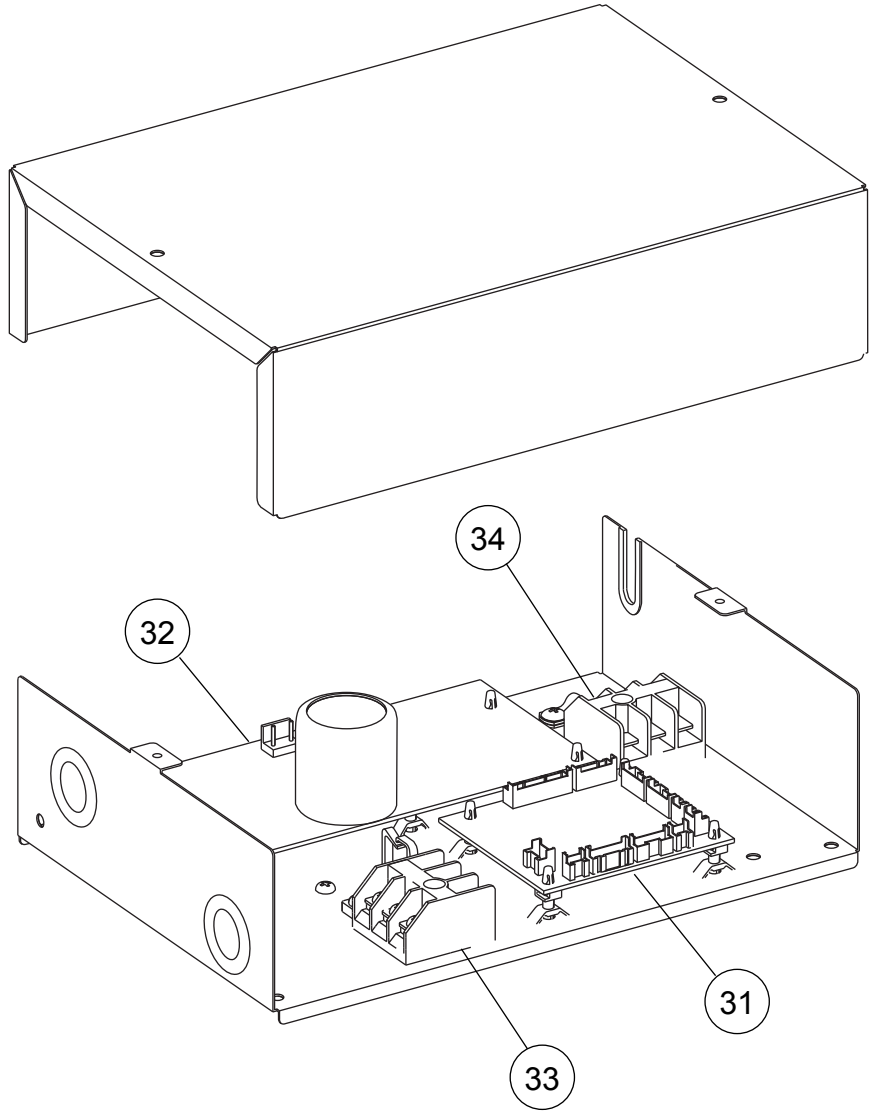


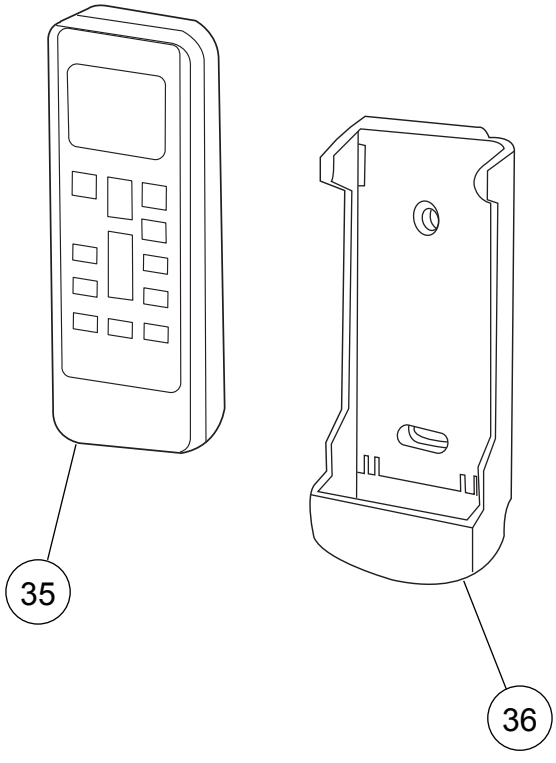


| Ref. | Description | Part number | |
|---|---|---|---|
| 31 | Controller PCB Assy (09) | 9707393743 | |
| 31 | Controller PCB Assy (12) | 9707393750 | |
| 31 | Controller PCB Assy (14) | 9707393767 | |
| 31 | Controller PCB Assy (18) | 9707393774 | |
| 32 | Power Supply PCB Assy | 9707398250 | |
| 33 | Terminal | 9306489045 | |
| 34 | Terminal | 9703345012 | |
| 35 | Remote Control | 9379219006 | |
| 36 | Remote Control Holder | 9305642045 | |
| -- | Pipe Thermistor | 9703297014 | |
| -- | Room Thermistor | 9900502003 | |

INDOOR UNIT
SLIM DUCT
ARAG09LLLA
ARAG12LLLA
ARAG14LLLA

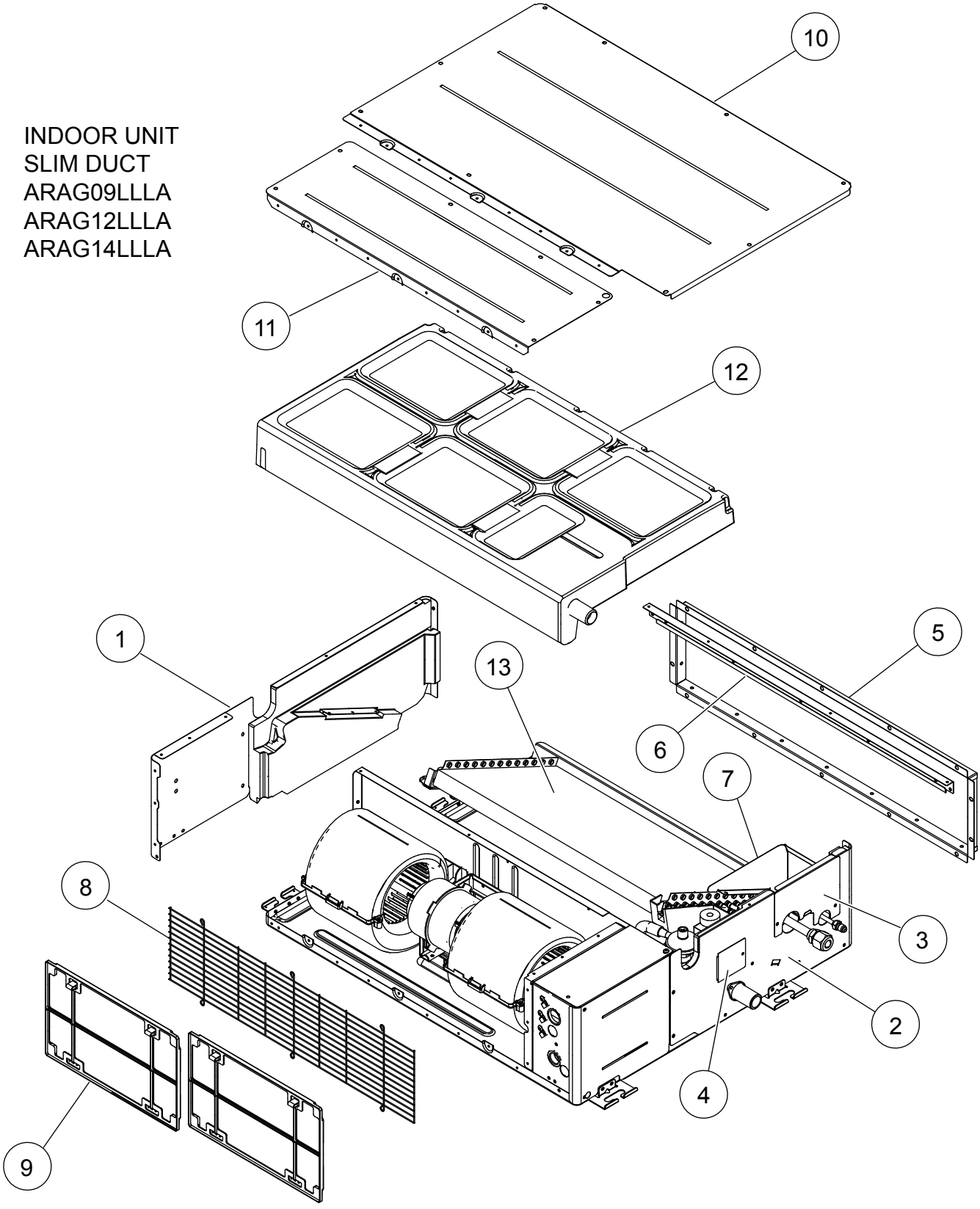


| Ref | Description | Parts number | |
|---|---|---|---|
| 1 | Side Panel R Sub Assy | 9379906012 | |
| 2 | Side Panel L Sub Assy | 9379907019 | |
| 3 | Pipe Panel Sub Assy | 9379900003 | |
| 4 | Panel (Window) Sub Assy | 9379915007 | |
| 5 | Outlet Frame Assy | 9380042006 | |
| 6 | Front Panel (2 Fan) | 9380594000 | |
| 7 | Valve Cover Sub Assy | 9379576017 | |

| Ref | Description | Parts number | |
|---|---|---|---|
| 8 | Fan Guard (2 Fan) | 9380589006 | |
| 9 | Air Filter | 9379574006 | |
| 10 | Main Panel (2 Fan) | 9380602002 | |
| 11 | Cabinet Panel (2 Fan) | 9380597001 | |
| 12 | Drain Pan Sub Assy | 9379901048 | |
| 13 | Evaporater Total Assy (09, 12) | 9380682042 | |
| 13 | Evaporater Total Assy (14) | 9380682059 | |

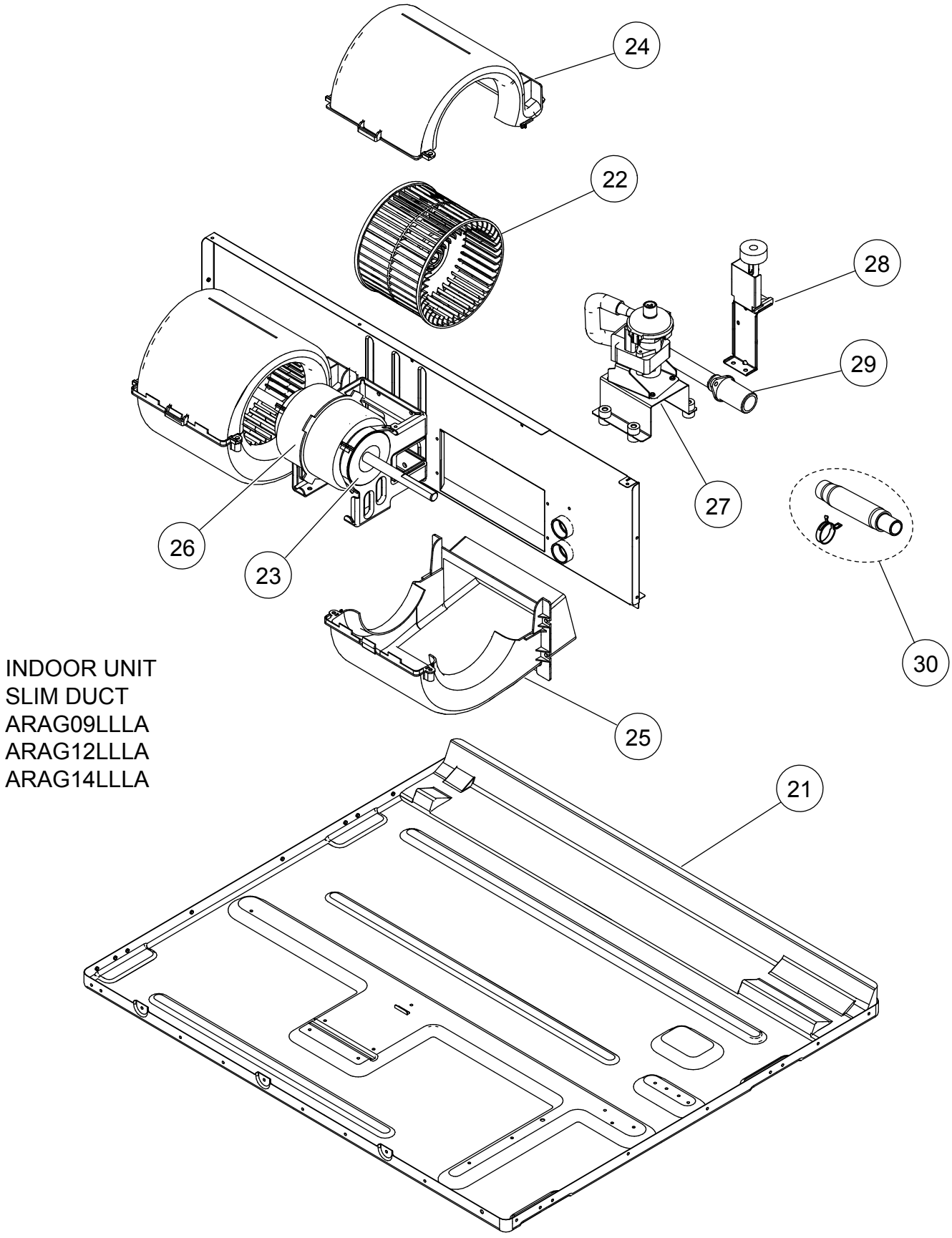


INDOOR UNIT
SLIM DUCT
ARAG09LLLA
ARAG12LLLA
ARAG14LLLA

| Ref | Description | Parts number | |
|---|---|---|---|
| 21 | Top Panel Sub Assy | 9379908030 | |
| 22 | Sirroco Fan Assy | 9379570015 | |
| 23 | Rubber (Vibration Proof) | 9379644006 | |
| 24 | Casing B | 9379572002 | |
| 25 | Casing U | 9379571005 | |

| Ref | Description | Parts number | |
|---|---|---|---|
| 26 | Fan Motor Assy | 9602967025 | |
| 27 | Drain Pump Sub Assy | 9379914024 | |
| 28 | Float Switch Sub Assy | 9378593022 | |
| 29 | Drain Hose Assy | 9379913003 | |
| 30 | Hose Sub Assy | 9378450097 | |

INDOOR UNIT
SLIM DUCT
ARAG18LLLA

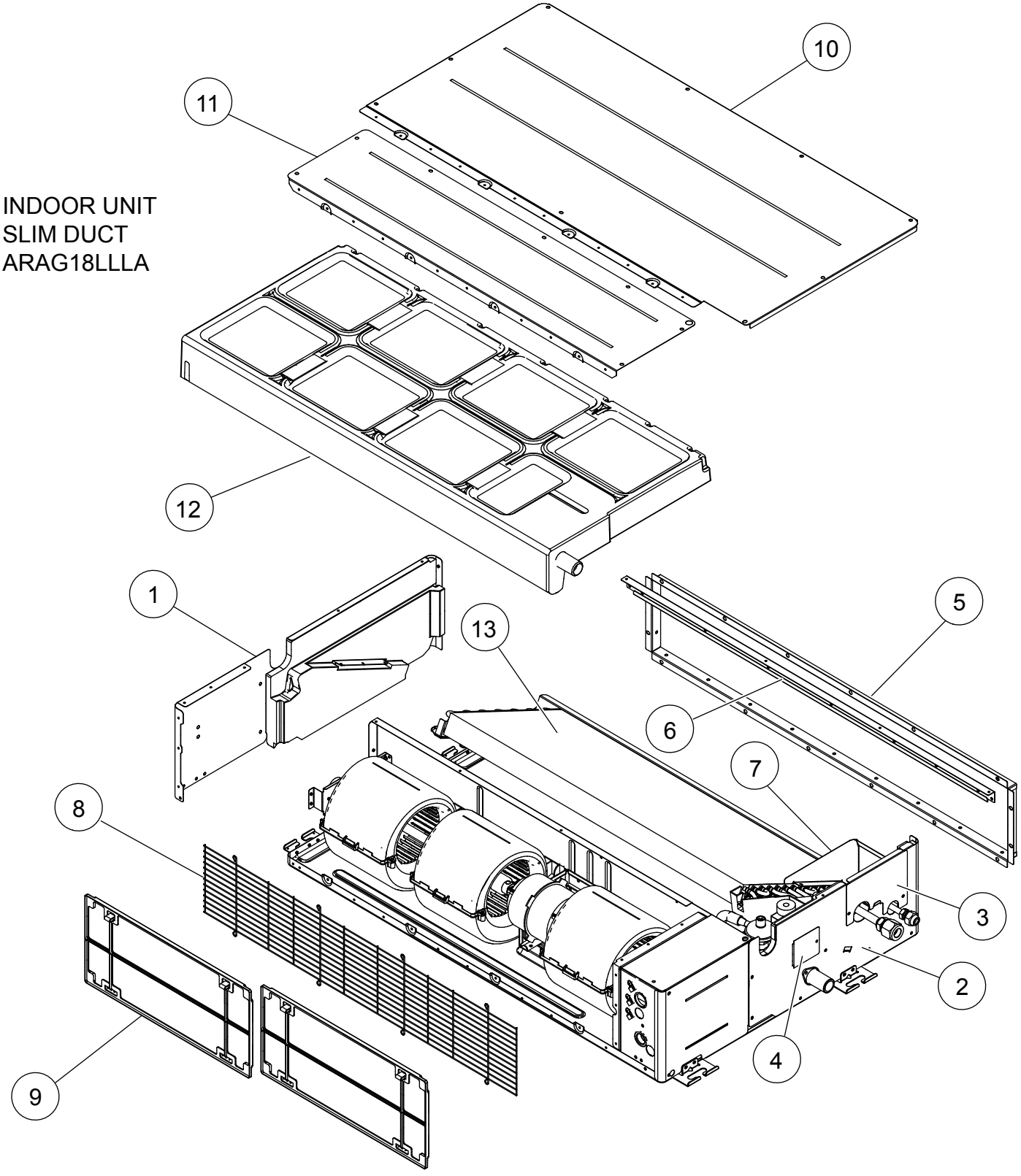


| Ref | Description | Parts number | |
|---|---|---|---|
| 1 | Side Panel R Sub Assy | 9379906012 | |
| 2 | Side Panel L Sub Assy | 9379907019 | |
| 3 | Pipe Panel Sub Assy | 9379900003 | |
| 4 | Panel (Window) Sub Assy | 9379915007 | |
| 5 | Outlet Frame Assy | 9380042013 | |
| 6 | Front Panel (3 Fan) | 9380595007 | |
| 7 | Valve Cover Sub Assy | 9379576017 | |

| Ref | Description | Parts number | |
|---|---|---|---|
| 8 | Fan Guard (3 Fan) | 9380590002 | |
| 9 | Air Filter | 9379575003 | |
| 10 | Main Panel (3 Fan) | 9380603009 | |
| 11 | Cabinet Panel (3 Fan) | 9380598008 | |
| 12 | Drain Pan Sub Assy | 9379901055 | |
| 13 | Evaporator Total Assy | 9380682066 | |

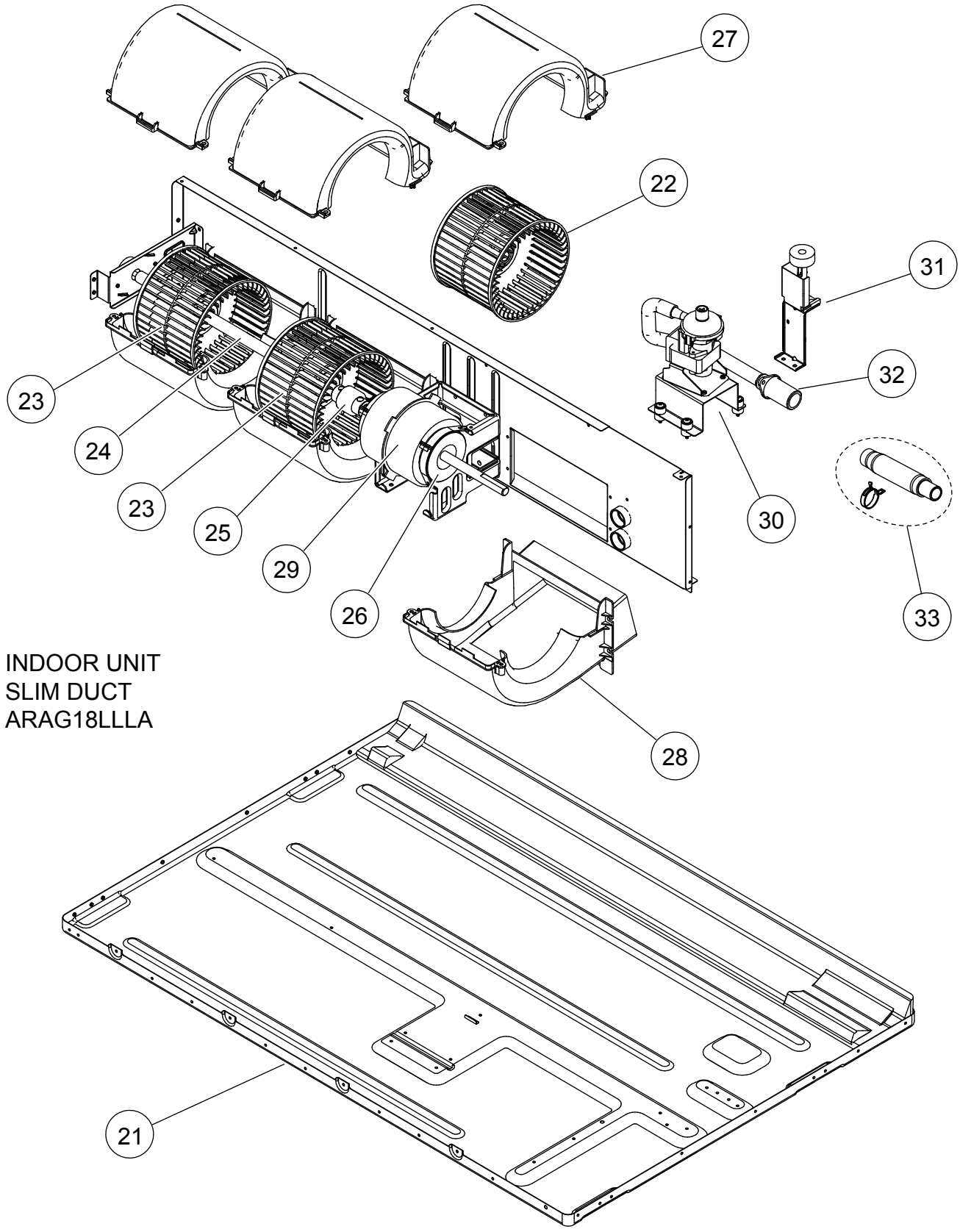


INDOOR UNIT
SLIM DUCT
ARAG18LLLA

| Ref | Description | Parts number | |
|---|---|---|---|
| 21 | Top Panel Sub Assy | 9379908047 | |
| 22 | Sirroco Fan Assy | 9379570022 | |
| 23 | Sirroco Fan Assy | 9379570039 | |
| 24 | Shaft | 9380398004 | |
| 25 | Joint Assy | 9378038011 | |
| 26 | Rubber (Vibration Proof) | 9379644006 | |
| 27 | Casing B | 9379572002 | |

| Ref | Description | Parts number | |
|---|---|---|---|
| 28 | Casing U | 9379571005 | |
| 29 | Fan Motor Assy | 9602968022 | |
| 30 | Drain Pump Sub Assy | 9379914024 | |
| 31 | Float Switch Sub Assy | 9378593022 | |
| 32 | Drain Hose Assy | 9379913003 | |
| 33 | Hose Sub Assy | 9378450097 | |

INDOOR UNIT
SLIM DUCT
ARAG24LLLA

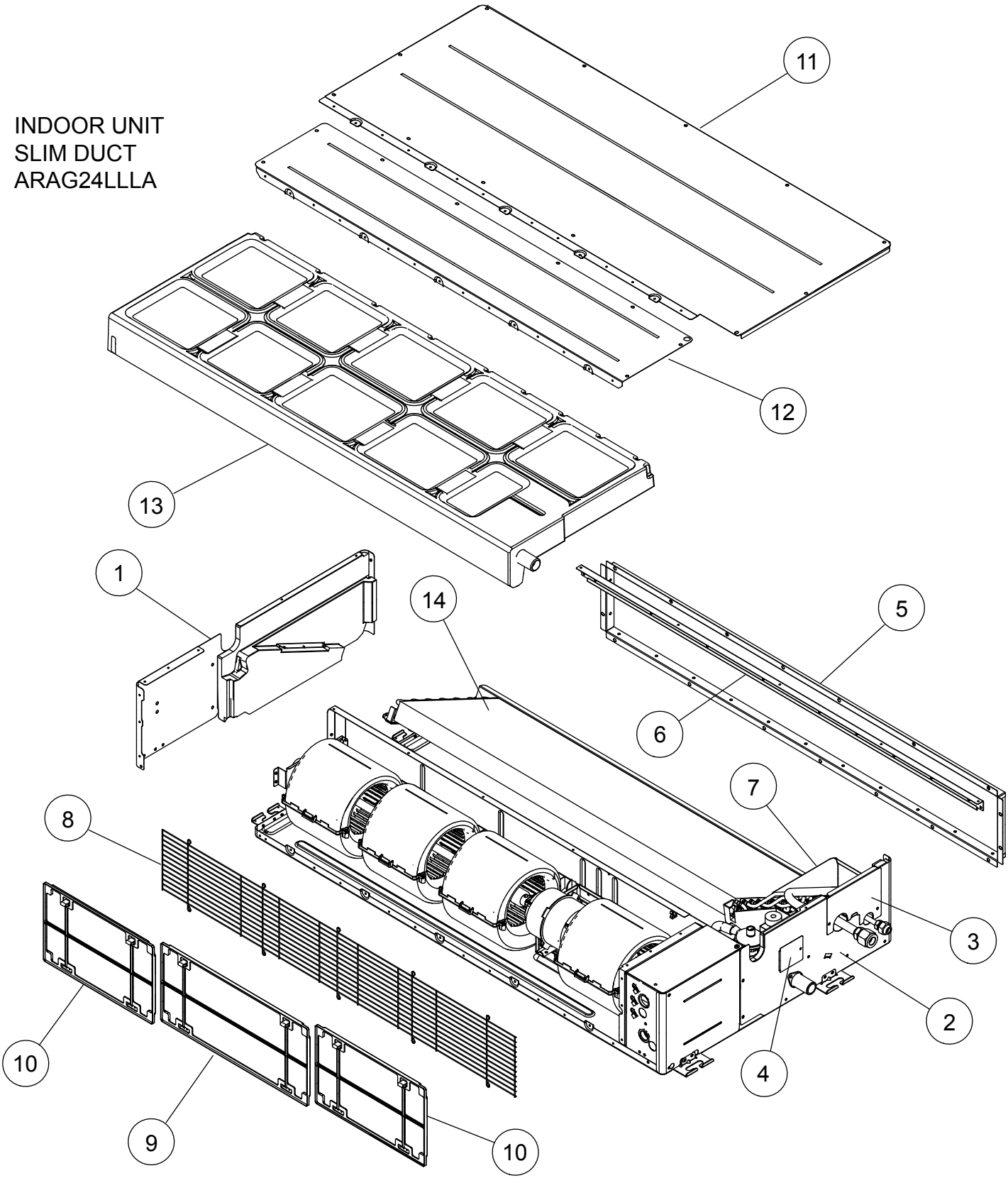


| Ref | Description | Parts number | |
|---|---|---|---|
| 1 | Side Panel R Sub Assy | 9379906012 | |
| 2 | Side Panel L Sub Assy | 9379907019 | |
| 3 | Pipe Panel Sub Assy | 9379900003 | |
| 4 | Panel (Window) Sub Assy | 9379915007 | |
| 5 | Outlet Frame Assy | 9380042020 | |
| 6 | Front Panel (4 Fan) | 9380596004 | |
| 7 | Valve Cover Sub Assy | 9379576017 | |

| Ref | Description | Parts number | |
|---|---|---|---|
| 8 | Fan Guard (4 Fan) | 9380591009 | |
| 9 | Air Filter | 9379575003 | |
| 10 | Air Filter | 9379574006 | |
| 11 | Main Panel (4 Fan) | 9380604006 | |
| 12 | Cabinet Panel (4 Fan) | 9380599005 | |
| 13 | Drain Pan Sub Assy | 9379901062 | |
| 14 | Evaporator Total Assy | 9380682073 | |

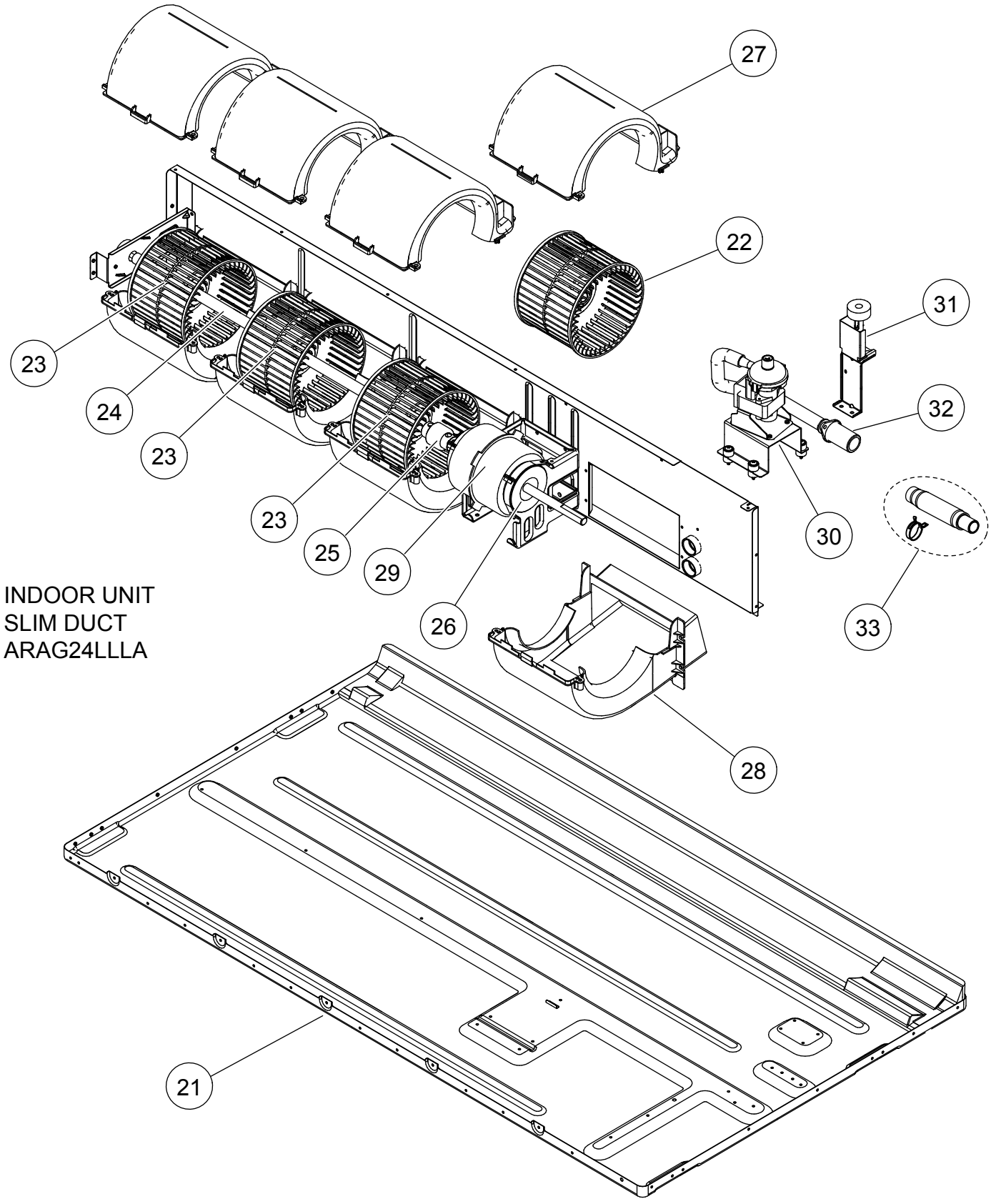


INDOOR UNIT
SLIM DUCT
ARAG24LLLA

| Ref. | Description | Parts number | |
|---|---|---|---|
| 21 | Top Panel Sub Assy | 9379908054 | |
| 22 | Sirroco Fan Assy | 9379570022 | |
| 23 | Sirroco Fan Assy | 9379570039 | |
| 24 | Shaft | 9380398011 | |
| 25 | Joint Assy | 9378038011 | |
| 26 | Rubber (Vibration Proof) | 9379644006 | |
| 27 | Casing B | 9379572002 | |

| Ref. | Description | Parts number | |
|---|---|---|---|
| 28 | Casing U | 9379571005 | |
| 29 | Fan Motor Assy | 9602968022 | |
| 30 | Drain Pump Sub Assy | 9379914024 | |
| 31 | Float Switch Sub Assy | 9378593022 | |
| 32 | Drain Hose Assy | 9379913003 | |
| 33 | Hose Sub Assy | 9378450097 | |

INDOOR UNIT
SLIM DUCT
ARAG09LLLA
ARAG12LLLA
ARAG14LLLA
ARAG18LLLA
ARAG24LLLA

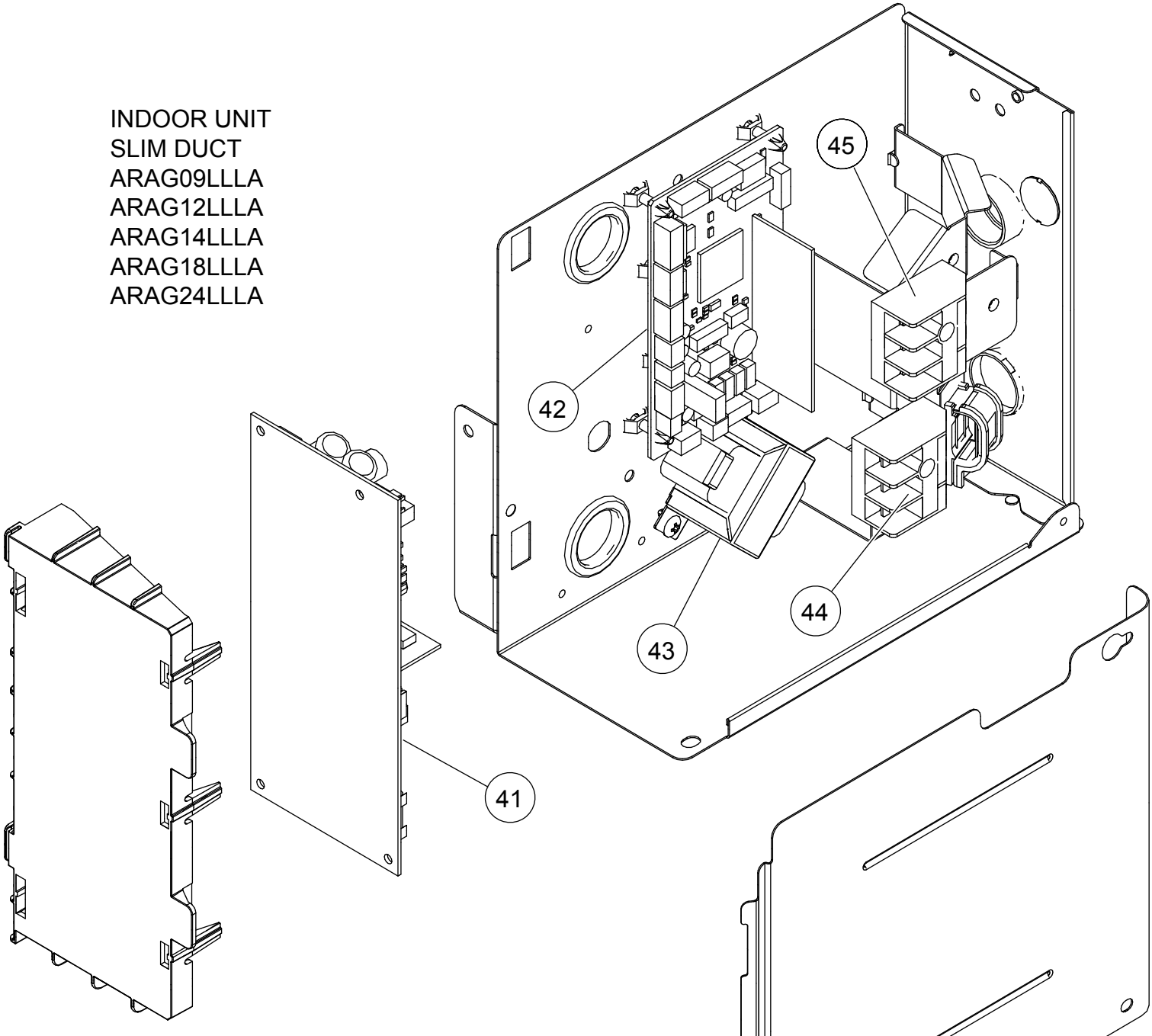


| Ref | Description | Parts number | |
|---|---|---|---|
| 41 | Power Supply PCB | 9707398267 | |
| 42 | Controller PCB Assy (09) | 9707393798 | |
| 42 | Controller PCB Assy (12) | 9707393804 | |
| 42 | Controller PCB Assy (14) | 9707393811 | |
| 42 | Controller PCB Assy (18) | 9707393828 | |
| 42 | Controller PCB Assy (24) | 9707393880 | |
| 43 | Reactor Assy | 9707457018 | |
| 44 | Terminal 3P | 9306489045 | |
| 45 | Terminal 3P (Wired Remote) | 9703345012 | |
| 46 | Wired Remote Control | 9318593013 | |
| -- | Room Thermistor | 9900653002 | |
| -- | Pipe Thermistor | 9900498108 | |

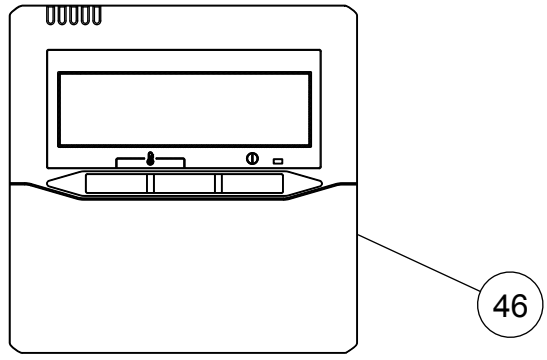

# ACCESSORIES

OUTDOOR UNIT

| Name and Shape | Q'ty | Application |
|---|---|---|
| Drain pipe | 1 | For outdoor unit drain piping work (May not be supplied, depending on the model.) |
| Drain cap | 2 | |
| Putty | 1 | For filling in a gap at the entrance of connection cords. |
| Adapter G (1/2" → 5/8") 12.7mm → 15.88mm | 1 | For connecting a pipe with different diameter to the outdoor unit. |
| Adapter D (1/2" → 3/8") 12.7mm → 9.52mm | 2 | |

INDOOR UNIT

COMPACT WALL MOUNTED
ASAG07, 09, 12LJCA

| Name and Shape | Q'ty |
|---|---|
| Wall hook bracket | 1 |
| Remote control | 1 |
| Battery | 2 |
| Remote control holder | 1 |
| Cloth tape | 1 |
| Tapping screw (big) | 8 |
| Tapping screw (small) | 2 |
| Air cleaning filter | 2 |

COMPACT WALL MOUNTED
ASYG07, 09, 12LUCA

| Name and Shape | Q'ty |
|---|---|
| Bracket panel | 1 |
| Remote control | 1 |
| Battery | 2 |
| Remote control holder | 1 |
| Cloth tape | 1 |
| Tapping screw (big) | 5 |
| Tapping screw (small) | 2 |
| Air cleaning filter | 2 |

WALL MOUNTED
ASAG18, 24LFCA

| Name and Shape | Q'ty |
|---|---|
| Wall hook bracket | 1 |
| Remote control | 1 |
| Battery | 2 |
| Remote control holder | 1 |
| Drain hose insulation | 1 |
| Cloth tape | 1 |
| Tapping screw (big) | 8 |
| Tapping screw (small) | 2 |
| Air cleaning filter | 2 |
| Air cleaning filter frame | 2 |

## INDOOR UNIT
## COMPACT CASSETTE
## AUAG09, 12, 14, 18LVLA

| Name and Shape | Q'ty | Application |
|---|---|---|
| Coupler heat insulation (Large) | 1 | For indoor side pipe joint (Gas pipe) |
| Coupler heat insulation (Small) | 1 | For indoor side pipe joint (Liquid pipe) |
| Special nut A (Large ßange) | 4 | For installing indoor unit |
| Special nut B (Small ßange) | 4 | For installing indoor unit |
| Template (Carton top) | 1 | For cealing openings cutting<br>Also used as packing |
| Drain hose | 1 | For installing drain pipe |
| Hose Band | 1 | For installing drain hose |
| Drain hose insulation | 1 | For installing drain pipe |
| Remote control | 1 | For air conditioner operation |
| Battery | 2 | For remote control |
| Remote control holder | 1 | For installing the remote control |
| Tapping screw (M3 × 12mm) | 2 | For mounting the remote control holder |
| Binder | 2 | For electrical wiring |
| Wire clamper | 1 | For electrical wiring |

## DECORATION PANEL
## UTG-UFYD-W

| Name and Shape | Q'ty | Application |
|---|---|---|
| Connector cover | 1 | For covering connector |
| Tapping Screw (M5 × 12 mm) | 4 | For mounting decoration panel |
| Tapping Screw (M4 × 12 mm) | 1 | For mounting connector cover |
| L angle | 2 | For mounting the hook wire to the decoration panel |
| Hook wire | 2 | For suspending the Decoration panel |
| Screw (pitch small) (M4 × 10 mm) | 2 | For mounting the hook wire (for metals) |
| Screw (pitch large) (M4 × 10 mm) | 4 | For mounting the L angle and hook wire (for resins) |

INDOOR UNIT
SLIM DUCT
ARAG09LLLA
ARAG12LLLA
ARAG14LLLA
ARAG18LLLA
ARAG24LLLA

| Name and Shape | Q'ty | Application |
|---|---|---|
| Installation template | 1 | For positioning the indoor unit |
| Washer | 8 | For installing indoor unit |
| Coupler heat insulation (Large) | 1 | For indoor side pipe joint (Large pipe) |
| Coupler heat insulation (Small) | 1 | For indoor side pipe joint (Small pipe) |
| Binder | Medium 3 | For power supply and remote control cable binding. |
| | Large 4 | For fixing the coupler heat insulation. |
| Filter (Small) | 2 | (ARAG09LLLA ARAG12LLLA ARAG14LLLA ARAG24LLLA) |
| Filter (Big) | 2 | (ARAG18LLLA) |
| | 1 | (ARAG24LLLA) |
| Drain hose | 1 | For installing drain pipe VP25 (O.D.32 I.D.26) |
| Hose band | 1 | For installing drain hose |
| Drain hose insulation B | 1 | Insulates the drain hose |
| Wired remote control | 1 | |
| Remote control cable | 1 | For connecting the remote control |
| Tapping screw (M4 × 16 mm) | 2 | For installing the remote control |

1112G3995