FUJITSU

HYBRID FLEX INVERTER SYSTEM

SERVICE MANUAL

Refrigerant R410A

Outdoor unit
AOYG45LAT8

Branch box
UTP-PY02A
UTP-PY03A

Separation tube
UTP-SX248A

Indoor unit
ASYG07LJCA
ASYG09LJCA
ASYG12LJCA
ASYG18LFCA
ASYG24LFCA
AUYG07LVLA
AUYG09LVLA
AUYG12LVLA
AUYG14LVLA
AUYG18LVLA
UTG-UFYD-W
AGYG09LVCA
AGYG12LVCA
AGYG14LVCA
ARYG07LLTA
ARYG09LLTA
ARYG12LLTA
ARYG14LLTA
ARYG18LLTA
ABYG14LVTA
ABYG18LVTA

CONTENTS

FUJITSU GENERAL LIMITED

SPECIFICATIONS

OUTDOOR UNIT

ELECTRICAL DATA

TYPE			Hybrid flex inverter system
MODEL NAME			AOYG45LAT8
POWER SUPPLY			230 V
FREQUENCY			50 Hz
CAPACITY	Cooling	Rated	48,000 Btu/h (14.0 kW)
		Max	51,100 Btu/h
	Heating	Rated	54,000 Btu/h (16.0 kW)
		Max	57,000 Btu/h
INPUT POWER	Cooling	Rated	5.20 kW
		Max.	5.98 kW
	Heating	Rated	5.07 kW
		Max.	5.98 kW
CURRENT	Cooling	Rated	23.1 A
		Max.	26.5 A
	Heating	Rated	22.5 A
		Max.	26.5 A

FAN MOTOR

DISCRIMINATION		MFE-45WVN
SPEED	Cooling	890 r.p.m.
	Heating	910 r.p.m.
AIR FLOW	Cooling (Rated)	4,650 m3/h
	Heating (Rated)	4,800 m3/h
NOISE LEVEL	Cooling (Rated)	56 dB(A)
	Heating (Rated)	58 dB(A)

COMPRESSOR AND REFRIGERANT

TYPE	Hermetic type, Inverter, 4 poles, 3-phase, DC motor, Twin Rotary
DISCRIMINATION	808 688 80(B)
WEIGHT	26.0 kg
PRECHARGED REFRIGERANT	3,450 g
REFRIGERANT TYPE	R410A

MEASUREMENT

DIMENSIONS	H x W x D	914 x 970 x 370 mm
WEIGHT	Net / Shipping	98 kg / 106 kg

BRANCH BOX

ELECTRICAL DATA

MODEL NAME	UTP-PY03A (3 branch) UTP-PY02A (2 branch)
MAX. COMBINATION	62,000 Btu/h
MIN. COMBINATION	7,000 Btu/h
POWER CONSUMPTION	10 W
RUNNING CURRENT	0.05 A

MEASUREMENT

DIMENSIONS	H x W x D	195 x 433 x 370 mm
WEIGHT	Net / Shipping	9 kg / 13 kg

INDOOR UNIT
COMPACT WALL MOUNTED

ELECTRICAL DATA

MODEL NAME	ASYG07LJCA	ASYG09LJCA	ASYG12LJCA
CAPACITY	2.0 kW class	2.5 kW class	3.5 kW class

FAN MOTOR

DISCRIMINATION			MFD-12TYAN		
FAN SPEED	Cooling	High	1,050 r.p.m.	1,100 r.p.m.	1,200 r.p.m.
		Medium	950 r.p.m.	980 r.p.m.	1,050 r.p.m.
		Low	850 r.p.m.	850 r.p.m.	880 r.p.m.
		Quiet	710 r.p.m.	710 r.p.m.	710 r.p.m.
	Heating	High	1,050 r.p.m.	1,100 r.p.m.	1,200 r.p.m.
		Medium	950 r.p.m.	980 r.p.m.	1,050 r.p.m.
		Low	850 r.p.m.	850 r.p.m.	910 r.p.m.
		Quiet	720 r.p.m.	720 r.p.m.	720 r.p.m.
AIR FLOW	Cooling	High	560 m^3/h	600 m^3/h	660 m^3/h
		Medium	500 m^3/h	520 m^3/h	560 m^3/h
		Low	430 m^3/h	430 m^3/h	450 m^3/h
		Quiet	340 m^3/h	340 m^3/h	340 m^3/h
	Heating	High	560 m^3/h	600 m^3/h	660 m^3/h
		Medium	500 m^3/h	520 m^3/h	560 m^3/h
		Low	430 m^3/h	430 m^3/h	470 m^3/h
		Quiet	350 m^3/h	350 m^3/h	350 m^3/h
NOISE LEVEL	Cooling	High	36 dB(A)	37 dB(A)	40 dB(A)
		Medium	32 dB(A)	33 dB(A)	36 dB(A)
		Low	29 dB(A)	29 dB(A)	30 dB(A)
		Quiet	25 dB(A)	25 dB(A)	25 dB(A)
	Heating	High	36 dB(A)	37 dB(A)	40 dB(A)
		Medium	32 dB(A)	33 dB(A)	36 dB(A)
		Low	29 dB(A)	29 dB(A)	31 dB(A)
		Quiet	25 dB(A)	25 dB(A)	25 dB(A)

MEASUREMENTS

DIMENSIONS	H x W x D	280 x 790 x 203 mm
WEIGHT	Net / Shipping	8.0 kg / 10.5 kg

INDOOR UNIT
WALL MOUNTED

ELECTRICAL DATA

MODEL NAME	ASYG18LFCA	ASYG24LFCA
CAPACITY	5.0 kW class	7.0 kW class

FAN MOTOR

DISCRIMINATION			MFD-50RON	
FAN SPEED	Cooling	High	1,250 r.p.m.	1,480 r.p.m.
		Medium	1,020 r.p.m.	1,220 r.p.m.
		Low	900 r.p.m.	1,020 r.p.m.
		Quiet	770 r.p.m.	900 r.p.m.
	Heating	High	1,250 r.p.m.	1,430 r.p.m.
		Medium	1,020 r.p.m.	1,220 r.p.m.
		Low	900 r.p.m.	1,020 r.p.m.
		Quiet	790 r.p.m.	900 r.p.m.
AIR FLOW	Cooling	High	920 m^3/h	1,120 m^3/h
		Medium	740 m^3/h	900 m^3/h
		Low	620 m^3/h	740 m^3/h
		Quiet	550 m^3/h	620 m^3/h
	Heating	High	920 m^3/h	1100 m^3/h
		Medium	740 m^3/h	900 m^3/h
		Low	620 m^3/h	740 m^3/h
		Quiet	550 m^3/h	620 m^3/h
NOISE LEVEL	Cooling	High	43 dB(A)	49 dB(A)
		Medium	37 dB(A)	42 dB(A)
		Low	33 dB(A)	37 dB(A)
		Quiet	31 dB(A)	33 dB(A)
	Heating	High	44 dB(A)	48 dB(A)
		Medium	37 dB(A)	42 dB(A)
		Low	33 dB(A)	37 dB(A)
		Quiet	31 dB(A)	33 dB(A)

MEASUREMENTS

DIMENSIONS	H x W x D	320 x 998 x 228 mm
WEIGHT	Net / Shipping	14 kg / 18 kg

INDOOR UNIT
COMPACT CASSETTE

ELECTRICAL DATA

MODEL NAME	AUYG07LVLA	AUYG09LVLA	AUYG12LVLA	AUYG14LVLA	AUYG18LVLA
CAPACITY	2.0 kW class	2.5 kW class	3.5 kW class	4.0 kW class	5.0 kW class

FAN MOTOR

DISCRIMINATION			MFF-24RVL				
FAN SPEED	Cooling	High	590 r.p.m.	590 r.p.m.	660 r.p.m.	730 r.p.m.	790 r.p.m.
		Medium	540 r.p.m.	540 r.p.m.	580 r.p.m.	630 r.p.m.	660 r.p.m.
		Low	490 r.p.m.	490 r.p.m.	520 r.p.m.	540 r.p.m.	570 r.p.m.
		Quiet	440 r.p.m.	440 r.p.m.	460 r.p.m.	460 r.p.m.	460 r.p.m.
	Heating	High	590 r.p.m.	590 r.p.m.	650 r.p.m.	740 r.p.m.	840 r.p.m.
		Medium	540 r.p.m.	540 r.p.m.	580 r.p.m.	670 r.p.m.	750 r.p.m.
		Low	490 r.p.m.	490 r.p.m.	520 r.p.m.	600 r.p.m.	650 r.p.m.
		Quiet	440 r.p.m.	440 r.p.m.	460 r.p.m.	480 r.p.m.	500 r.p.m.
AIR FLOW	Cooling	High	540 m^3/h	540 m^3/h	610 m^3/h	680 m^3/h	750 m^3/h
		Medium	490 m^3/h	490 m^3/h	530 m^3/h	580 m^3/h	610 m^3/h
		Low	440 m^3/h	440 m^3/h	470 m^3/h	490 m^3/h	520 m^3/h
		Quiet	390 m^3/h	390 m^3/h	410 m^3/h	410 m^3/h	410 m^3/h
	Heating	High	540 m^3/h	540 m^3/h	610 m^3/h	700 m^3/h	800 m^3/h
		Medium	490 m^3/h	490 m^3/h	530 m^3/h	620 m^3/h	710 m^3/h
		Low	440 m^3/h	440 m^3/h	470 m^3/h	550 m^3/h	600 m^3/h
		Quiet	390 m^3/h	390 m^3/h	410 m^3/h	430 m^3/h	450 m^3/h
NOISE LEVEL	Cooling	High	33 dB(A)	33 dB(A)	37 dB(A)	40 dB(A)	42 dB(A)
		Medium	31 dB(A)	31 dB(A)	33 dB(A)	35 dB(A)	37 dB(A)
		Low	29 dB(A)	29 dB(A)	31 dB(A)	32 dB(A)	33 dB(A)
		Quiet	27 dB(A)	27 dB(A)	28 dB(A)	29 dB(A)	29 dB(A)
	Heating	High	34 dB(A)	34 dB(A)	37 dB(A)	40 dB(A)	44 dB(A)
		Medium	32 dB(A)	32 dB(A)	33 dB(A)	37 dB(A)	40 dB(A)
		Low	29 dB(A)	29 dB(A)	31 dB(A)	34 dB(A)	37 dB(A)
		Quiet	27 dB(A)	27 dB(A)	28 dB(A)	29 dB(A)	30 dB(A)

MEASUREMENTS

DIMENSIONS	H x W x D	245 x 570 x 570 mm
WEIGHT	Net / Shipping	15 kg / 18 kg

PANEL

MEASUREMENTS

MODEL NAME		UTG-UFYD-W
DIMENSIONS	H x W x D	49 x 700 x 700 mm
WEIGHT	Net / Shipping	2.6 kg / 4.5 kg

INDOOR UNIT
FLOOR

ELECTRICAL DATA

MODEL NAME	AGYG09LVCA	AGYG12LVCA	AGYG14LVCA
CAPACITY	2.5 kW class	3.5 kW class	4.0 kW class

FAN MOTOR

DISCRIMINATION			MFD-14TXN (upper) / MFD-14SXN (lower)		
FAN SPEED (upper fan / lower fan)	Cooling	High	1,120 / 950 r.p.m.	1,240 / 1,050 r.p.m.	1,330 / 1,120 r.p.m.
		Medium	960 / 820 r.p.m.	1,050 / 890 r.p.m.	1,100 / 930 r.p.m.
		Low	820 / 700 r.p.m.	860 / 730 r.p.m.	890 / 750 r.p.m.
		Quiet	660 / 560 r.p.m.	660 / 560 r.p.m.	660 / 560 r.p.m.
	Heating	High	1,120 / 950 r.p.m.	1,240 / 1,050 r.p.m.	1,330 / 1,120 r.p.m.
		Medium	1,000 / 850 r.p.m.	1,080 / 920 r.p.m.	1,140 / 970 r.p.m.
		Low	860 / 730 r.p.m.	910 / 770 r.p.m.	940 / 800 r.p.m.
		Quiet	660 / 560 r.p.m.	660 / 560 r.p.m.	660 / 560 r.p.m.
AIR CIRCULATION HIGH (2 fan running)	Cooling	High	570 m3/hr	570 m3/hr	650 m3/hr
		Medium	460 m3/hr	460 m3/hr	520 m3/hr
		Low	390 m3/hr	360 m3/hr	400 m3/hr
		Quiet	270 m3/hr	270 m3/hr	270 m3/hr
	Heating	High	600 m3/hr	600 m3/hr	650 m3/hr
		Medium	480 m3/hr	480 m3/hr	520 m3/hr
		Low	370 m3/hr	370 m3/hr	390 m3/hr
		Quiet	270 m3/hr	270 m3/hr	270 m3/hr
NOISE LEVEL	Cooling	High	39 dB(A)	42 dB(A)	44 dB(A)
		Medium	34 dB(A)	36 dB(A)	38 dB(A)
		Low	28 dB(A)	30 dB(A)	31 dB(A)
		Quiet	22 dB(A)	22 dB(A)	22 dB(A)
	Heating	High	39 dB(A)	42 dB(A)	44 dB(A)
		Medium	35 dB(A)	38 dB(A)	39 dB(A)
		Low	30 dB(A)	32 dB(A)	33 dB(A)
		Quiet	22 dB(A)	22 dB(A)	22 dB(A)

MEASUREMENT

DIMENSIONS	H x W x D	600 x 740 x 200 mm
WEIGHT	Net / Shipping	14 kg / 17 kg

INDOOR UNIT
SLIM DUCT

ELECTRICAL DATA

MODEL NAME	ARYG07LLTA	ARYG09LLTA	ARYG12LLTA	ARYG14LVTA	ARYG18LLTA
CAPACITY	2.0 kW class	2.5 kW class	3.5 kW class	4.0 kW class	5.0 kW class

FAN MOTOR

DISCRIMINATION			MFG-14WV				MFG-24WV
FAN SPEED	Cooling	High	1,160 r.p.m.	1,260 r.p.m.	1,340 r.p.m.	1,560 r.p.m.	1,380 r.p.m.
		Medium	1,000 r.p.m.	1,160 r.p.m.	1,240 r.p.m.	1,400 r.p.m.	1,300 r.p.m.
		Low	940 r.p.m.	1,060 r.p.m.	1,140 r.p.m.	1,240 r.p.m.	1,220 r.p.m.
		Quiet	880 r.p.m.	960 r.p.m.	1,030 r.p.m.	1,030 r.p.m.	1,140 r.p.m.
	Heating	High	1,160 r.p.m.	1,260 r.p.m.	1,340 r.p.m.	1,560 r.p.m.	1,380 r.p.m.
		Medium	1,000 r.p.m.	1,160 r.p.m.	1,240 r.p.m.	1,400 r.p.m.	1,300 r.p.m.
		Low	940 r.p.m.	1,060 r.p.m.	1,140 r.p.m.	1,240 r.p.m.	1,220 r.p.m.
		Quiet	880 r.p.m.	960 r.p.m.	1,030 r.p.m.	1,030 r.p.m.	1,140 r.p.m.
AIR FLOW	Cooling	High	550 m^3/h	600 m^3/h	650 m^3/h	800 m^3/h	940 m^3/h
		Medium	490 m^3/h	550 m^3/h	600 m^3/h	700 m^3/h	880 m^3/h
		Low	470 m^3/h	500 m^3/h	550 m^3/h	600 m^3/h	820 m^3/h
		Quiet	440 m^3/h	450 m^3/h	480 m^3/h	480 m^3/h	750 m^3/h
	Heating	High	550 m^3/h	600 m^3/h	650 m^3/h	800 m^3/h	940 m^3/h
		Medium	490 m^3/h	550 m^3/h	600 m^3/h	700 m^3/h	880 m^3/h
		Low	470 m^3/h	500 m^3/h	550 m^3/h	600 m^3/h	820 m^3/h
		Quiet	440 m^3/h	450 m^3/h	480 m^3/h	480 m^3/h	750 m^3/h
NOISE LEVEL	Cooling	High	28 dB(A)	28 dB(A)	29 dB(A)	32 dB(A)	32 dB(A)
		Medium	26 dB(A)	27 dB(A)	28 dB(A)	30 dB(A)	31 dB(A)
		Low	25 dB(A)	26 dB(A)	27 dB(A)	28 dB(A)	30 dB(A)
		Quiet	24 dB(A)	25 dB(A)	26 dB(A)	26 dB(A)	29 dB(A)
	Heating	High	28 dB(A)	28 dB(A)	29 dB(A)	33 dB(A)	33 dB(A)
		Medium	26 dB(A)	26 dB(A)	28 dB(A)	30 dB(A)	32 dB(A)
		Low	25 dB(A)	25 dB(A)	27 dB(A)	28 dB(A)	31 dB(A)
		Quiet	24 dB(A)	24 dB(A)	24 dB(A)	25 dB(A)	29 dB(A)

MEASUREMENTS

DIMENSIONS	H x W x D	198 x 700 x 620 mm	198 x 900 x 620 mm
WEIGHT	Net / Shipping	19 kg / 25 kg	23 kg / 29 kg

INDOOR UNIT
FLOOR / CEILING

ELECTRICAL DATA

MODEL NAME	ABYG14LVTA	ABYG18LVTA
CAPACITY	4.0 kW class	5.00 kW class

FAN MOTOR

DISCRIMINATION			MFH-24RVL	
FAN SPEED	Cooling	High	1,380 r.p.m.	1,460 r.p.m.
		Medium	1,300 r.p.m.	1,360 r.p.m.
		Low	1,220 r.p.m.	1,260 r.p.m.
		Quiet	1,140 r.p.m.	1,180 r.p.m.
	Heating	High	1,380 r.p.m.	1,460 r.p.m.
		Medium	1,300 r.p.m.	1,360 r.p.m.
		Low	1,220 r.p.m.	1,260 r.p.m.
		Quiet	1,140 r.p.m.	1,180 r.p.m.
AIR FLOW	Cooling	High	940 m^3/h	1330 m^3/h
		Medium	880 m^3/h	1240 m^3/h
		Low	820 m^3/h	1100 m^3/h
		Quiet	750 m^3/h	1030 m^3/h
	Heating	High	940 m^3/h	1330 m^3/h
		Medium	880 m^3/h	1240 m^3/h
		Low	820 m^3/h	1100 m^3/h
		Quiet	750 m^3/h	1030 m^3/h
NOISE LEVEL	Cooling	High	32 dB(A)	33 dB(A)
		Medium	31 dB(A)	32 dB(A)
		Low	30 dB(A)	30 dB(A)
		Quiet	29 dB(A)	29 dB(A)
	Heating	High	33 dB(A)	35 dB(A)
		Medium	32 dB(A)	34 dB(A)
		Low	31 dB(A)	32 dB(A)
		Quiet	29 dB(A)	29 dB(A)

MEASUREMENTS

DIMENSIONS	H x W x D	199 x 990 x 655 mm
WEIGHT	Net / Shipping	27 kg / 36 kg

DIMENSIONS

OUTDOOR UNIT
AOYG45LAT8

Unit : mm

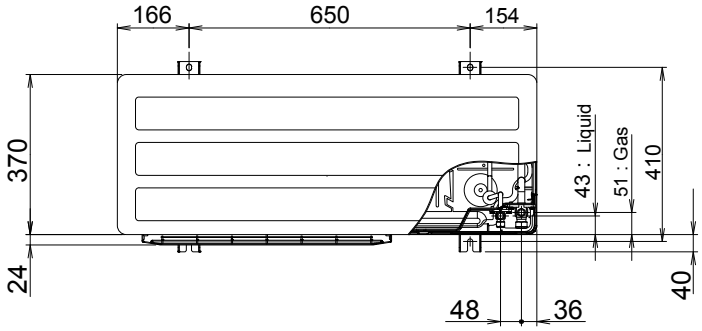

Top view

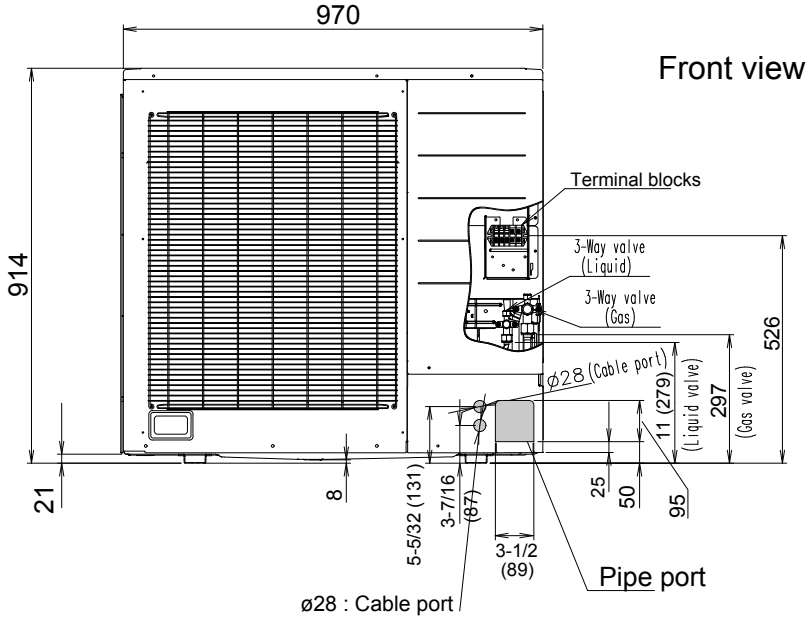

Front view

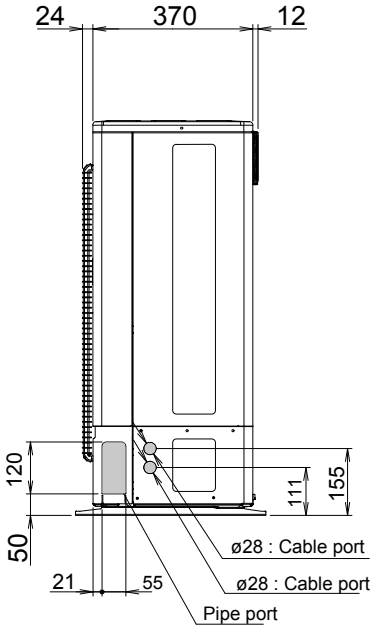

Side view

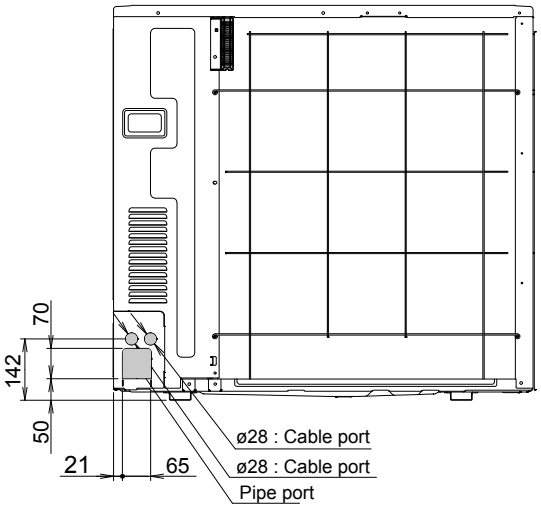

Rear view

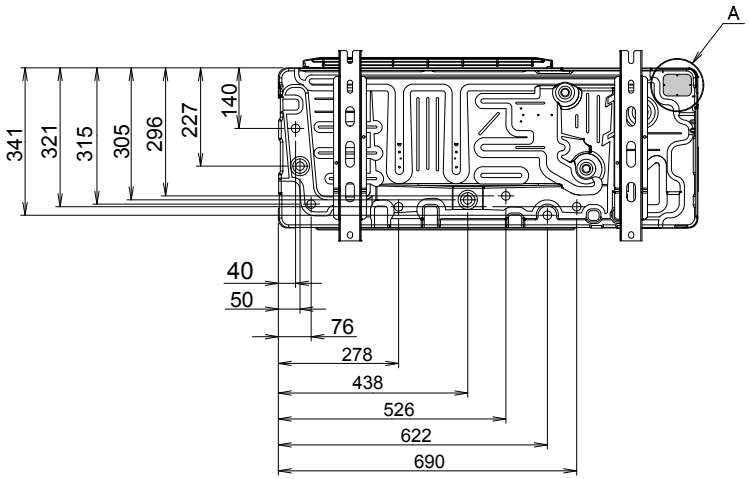

Bottom view

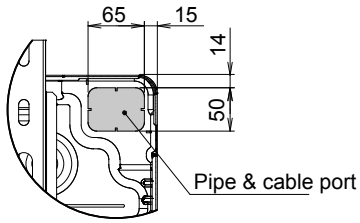

Detail A

BRANCH BOX
UTP-PY03A

Unit : mm

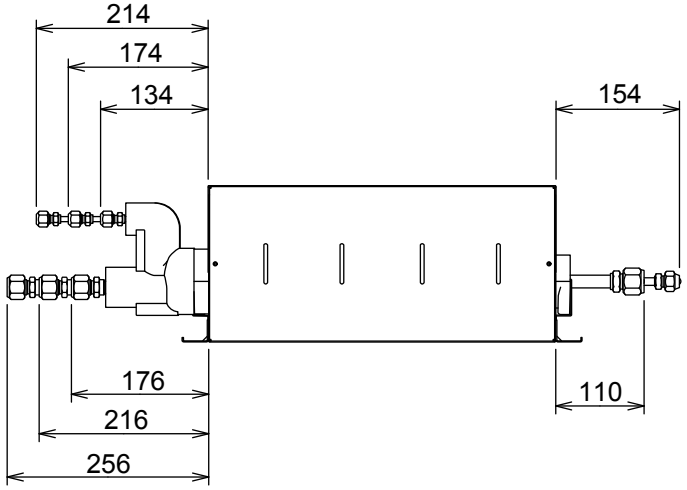

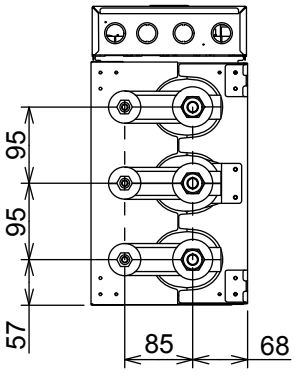

Indoor unit side

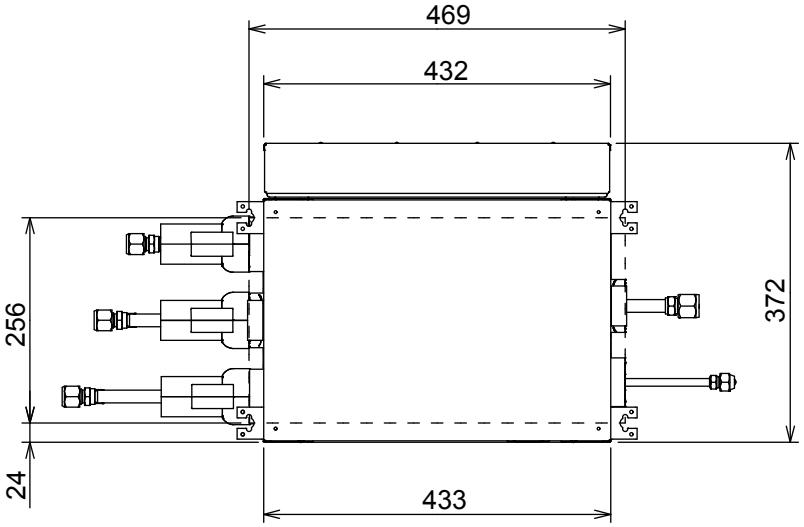

Ceiling hanging

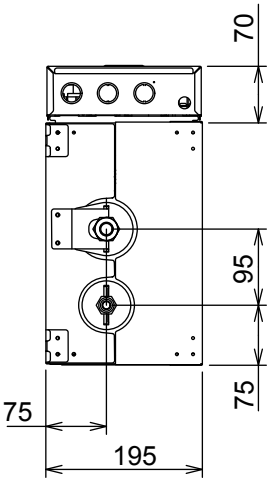

Outdoor unit side

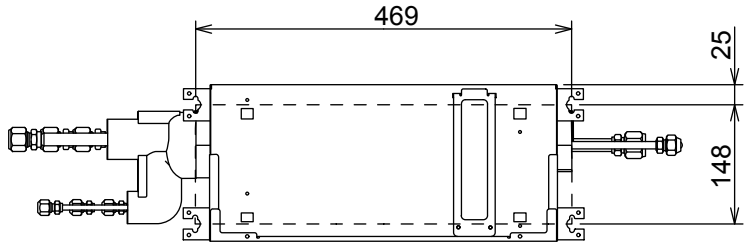

Wall hanging

BRANCH BOX
UTP-PY02A
Unit : mm

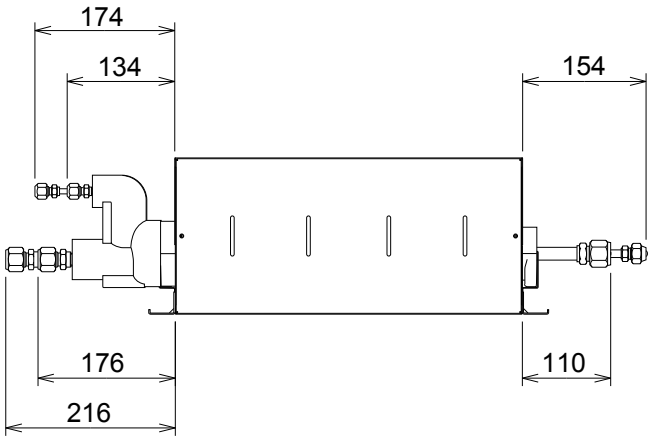

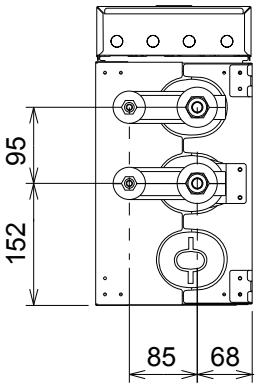

Indoor unit side

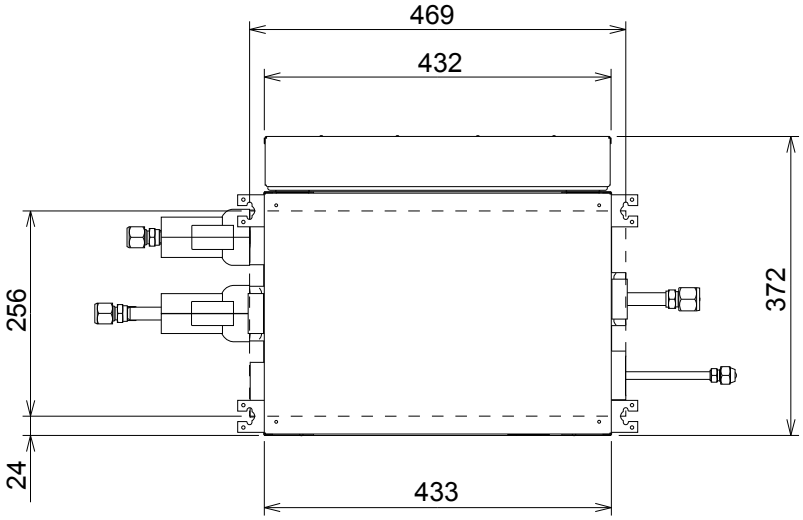

Ceiling hanging

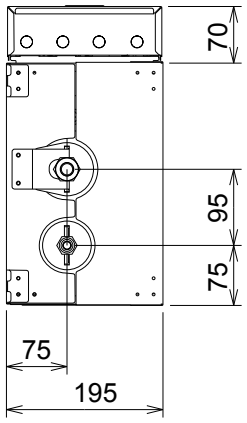

Outdoor unit side

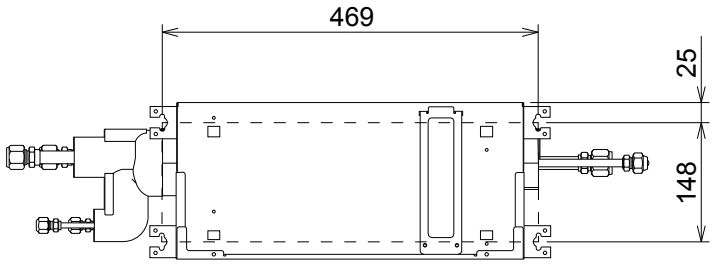

Wall hanging

INDOOR UNIT
COMPACT WALL MOUNTED
ASYG07LJCA
ASYG09LJCA
ASYG12LJCA

Unit : mm

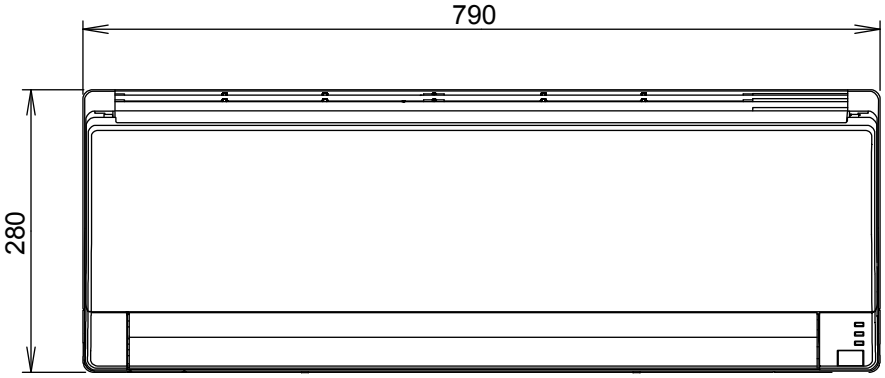

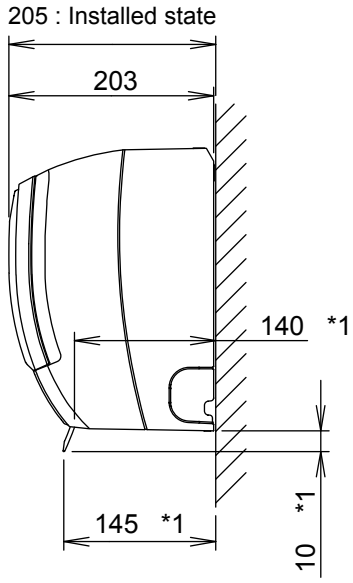

*1: Vertical flap is downward

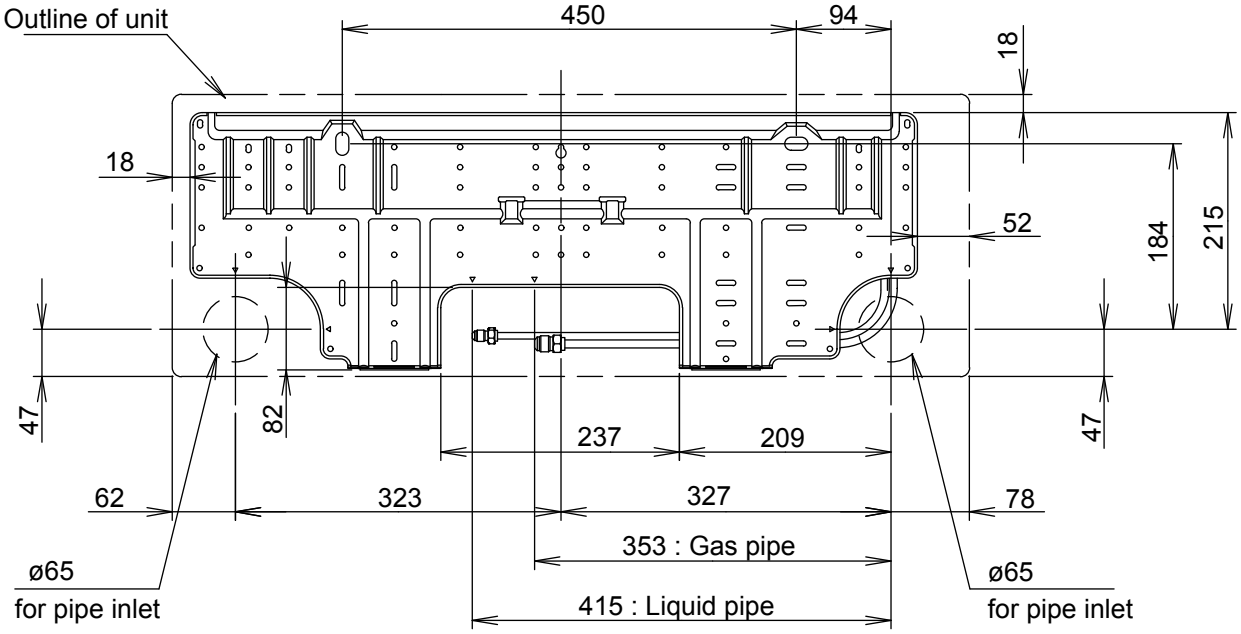

INDOOR UNIT
WALL MOUNTED
ASYG18LFCA
ASYG24LFCA
Unit : mm

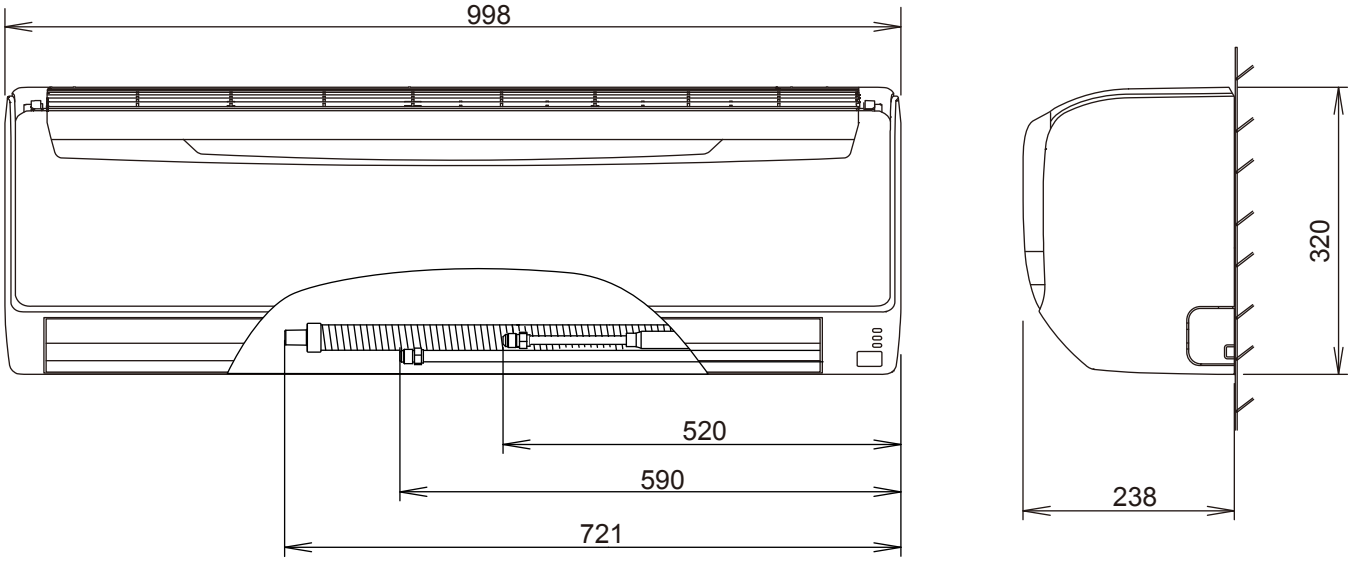

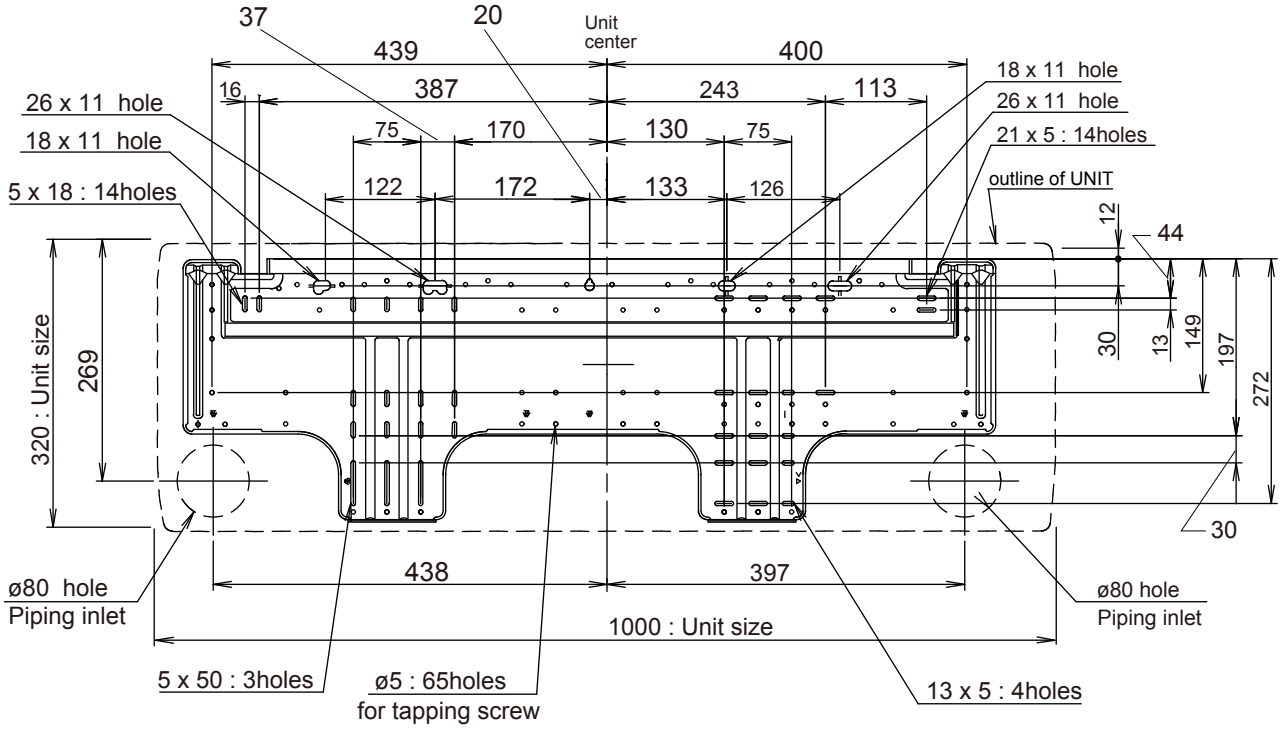

INDOOR UNIT
COMPACT CASSETTE
AUYG07LVLA
AUYG09LVLA
AUYG12LVLA
AUYG14LVLA
AUYG18LVLA

Unit : mm

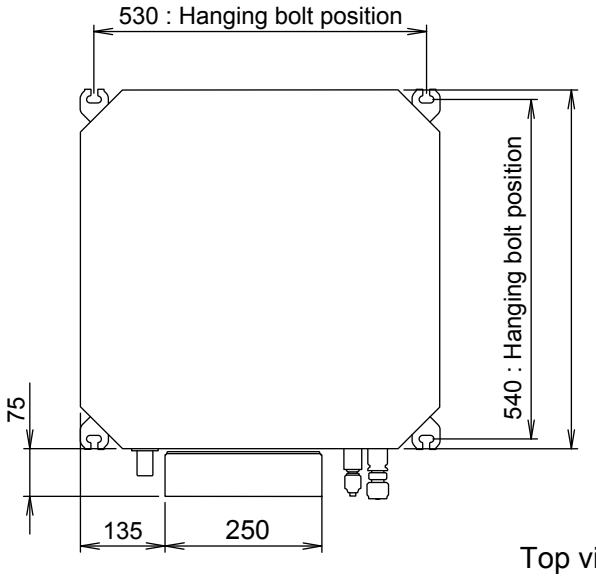

Top view

• Decoration panel mounting state

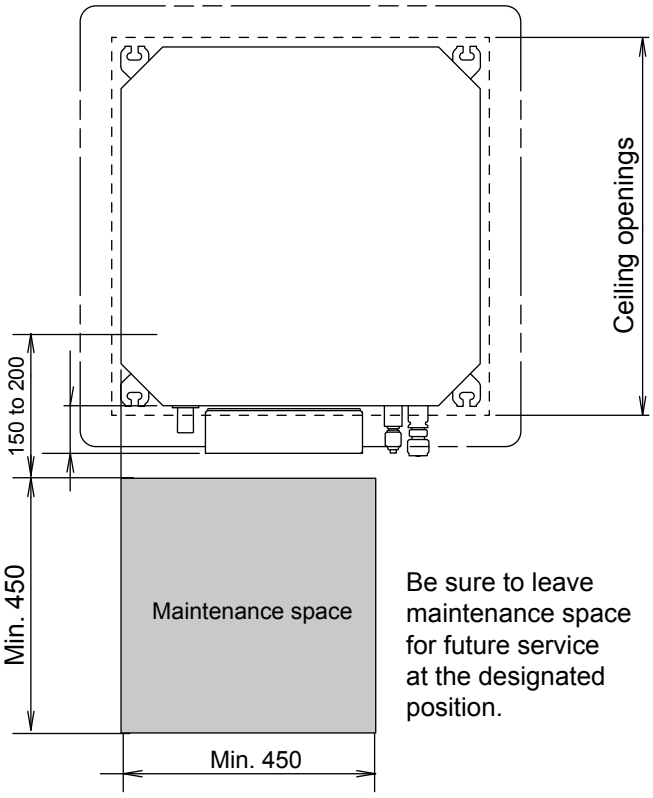

Be sure to leave maintenance space for future service at the designated position.

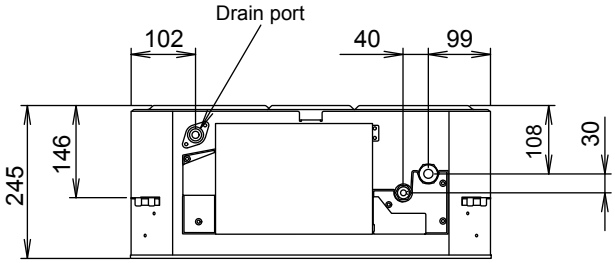

Side view

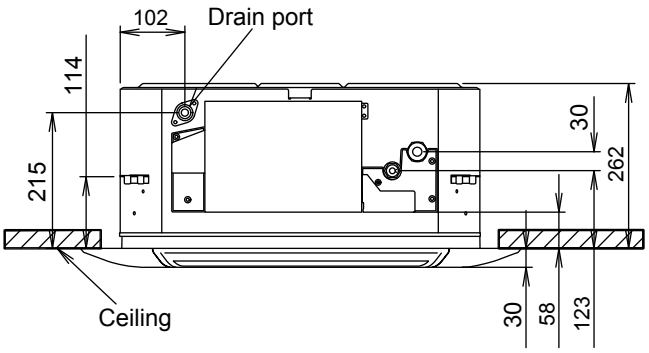

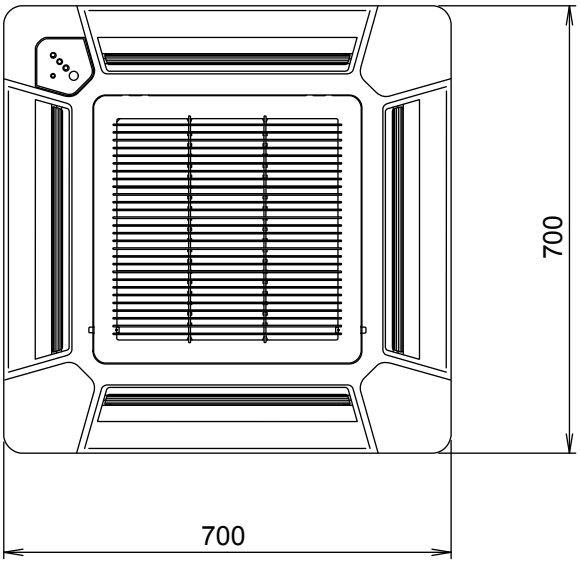

Bottom view

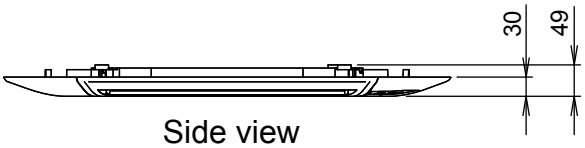

Side view

INDOOR UNIT

AGYG09LVCA
AGYG12LVCA
AGYG14LVCA

unit : mm

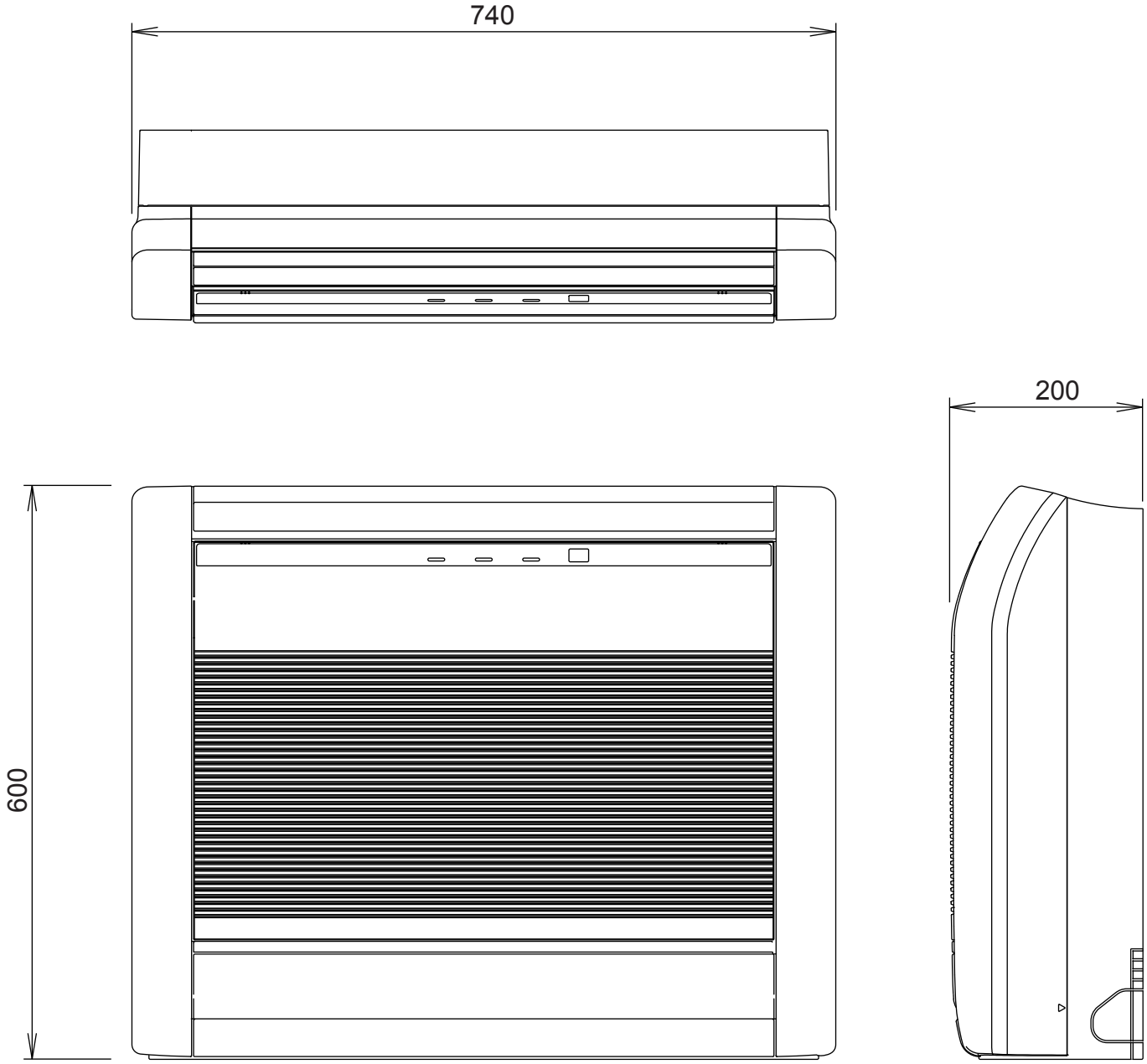

INDOOR UNIT
SLIM DUCT
ARYG07LLTA
ARYG09LLTA
ARYG12LLTA
ARYG14LLTA
(Serial number : T)
Unit : mm

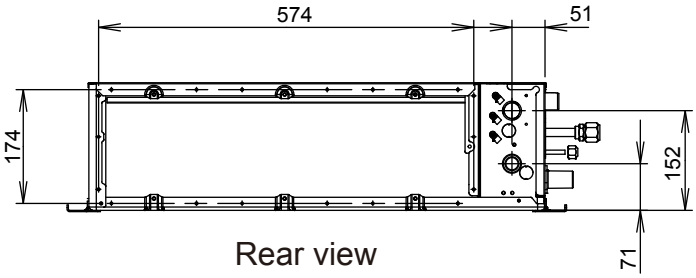

Rear view

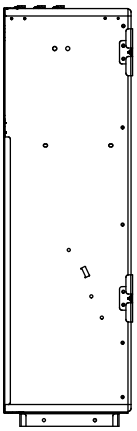

View A

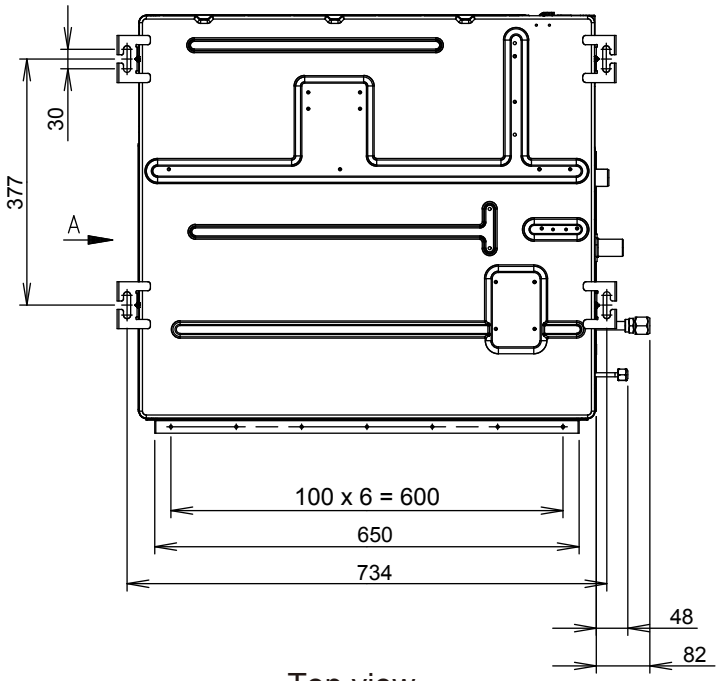

Top view

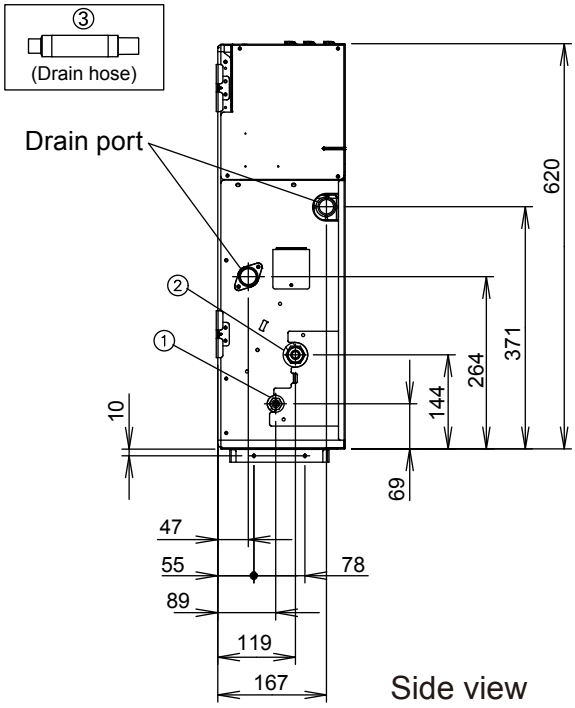

Side view

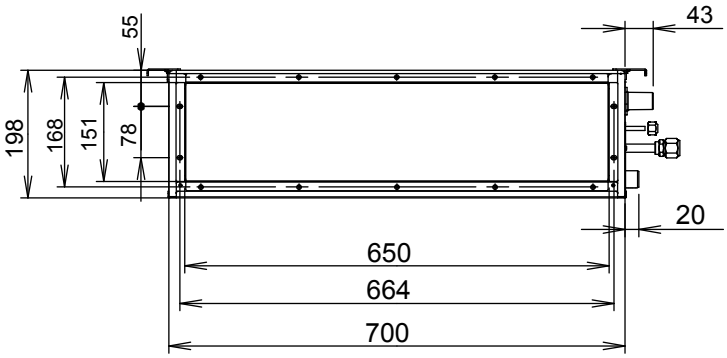

Front view

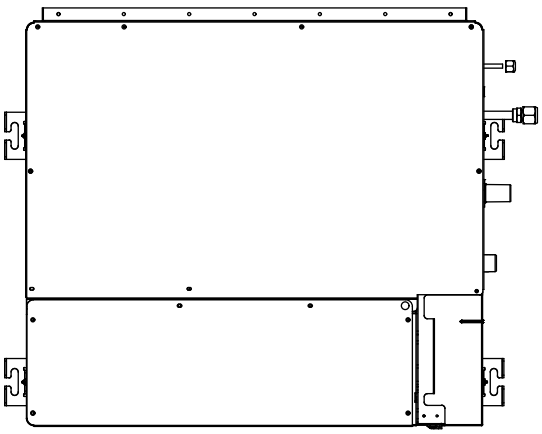

Bottom view

INDOOR UNIT
SLIM DUCT
ARYG18LLTA
(Serial number : T)

Unit : mm

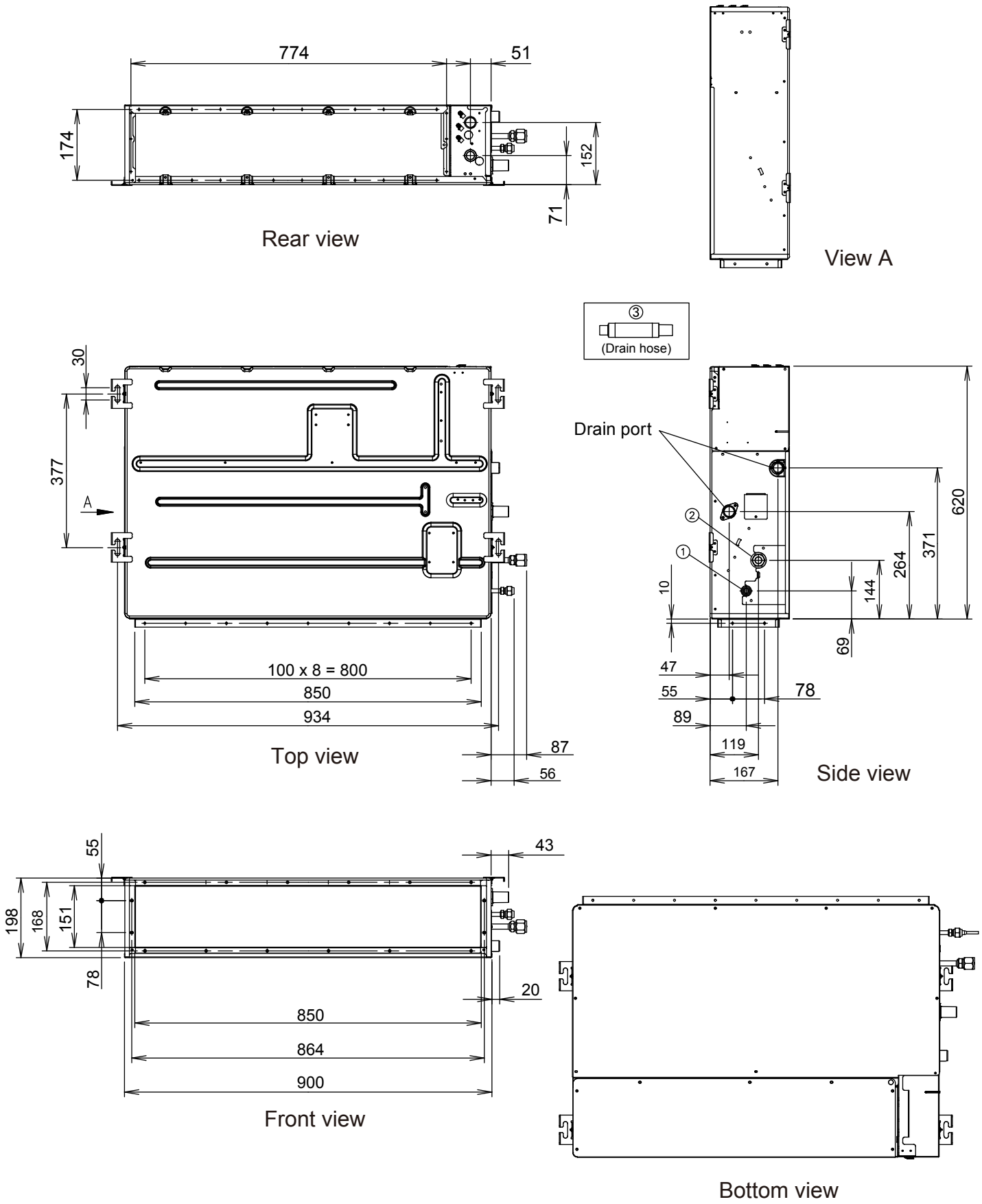

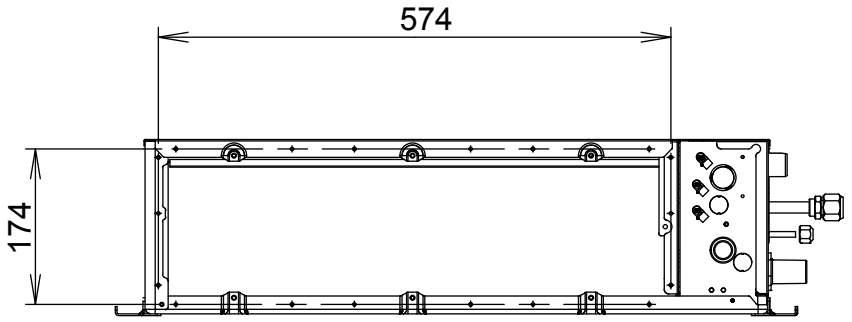

INDOOR UNIT
SLIM DUCT
ARYG07LLTA
ARYG09LLTA
ARYG12LLTA
ARYG14LLTA
(Serial number : R)
Unit : mm

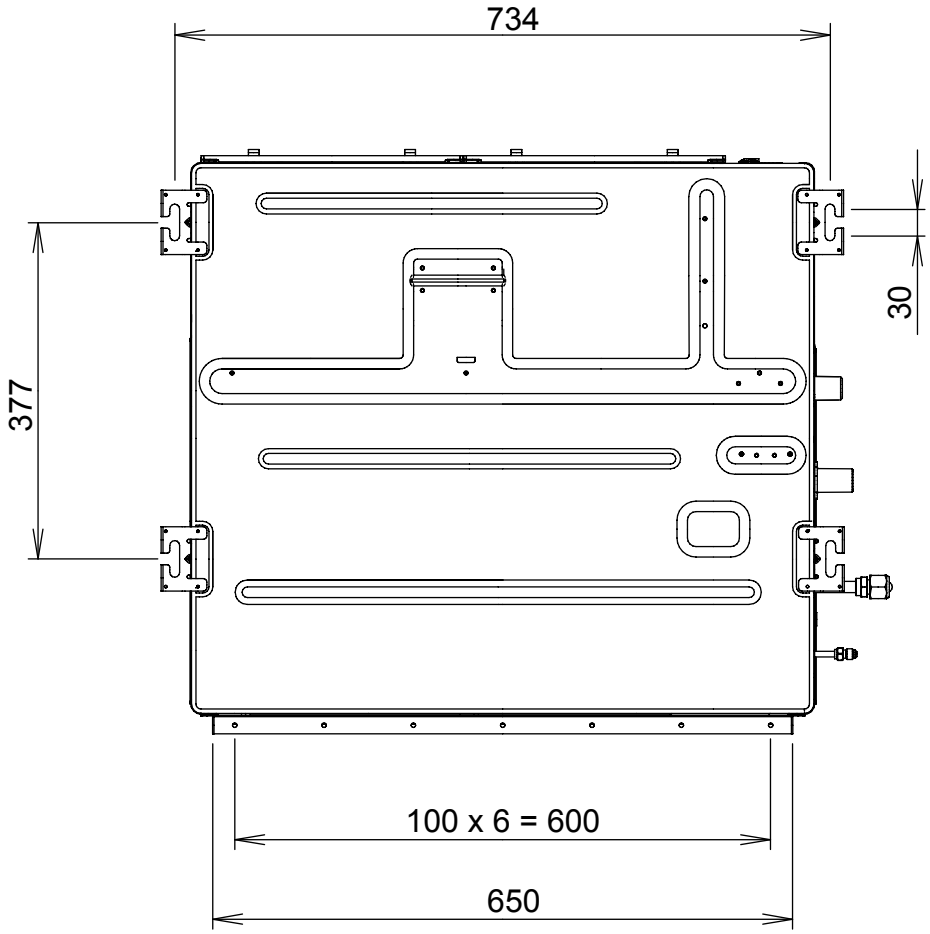

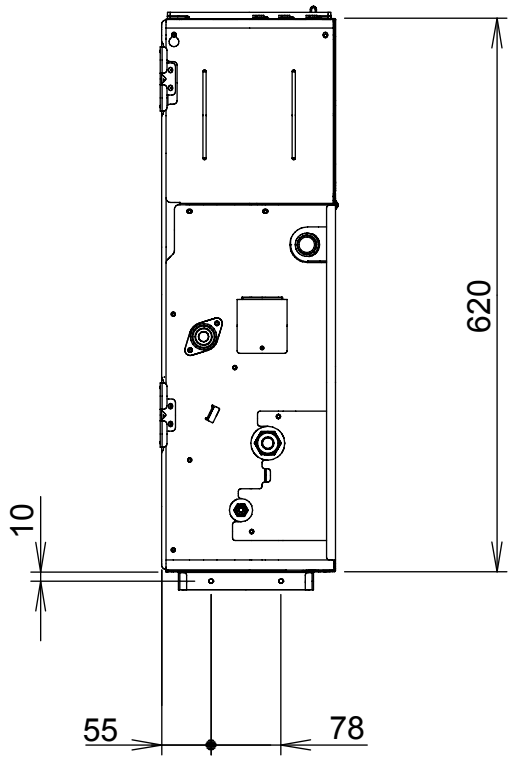

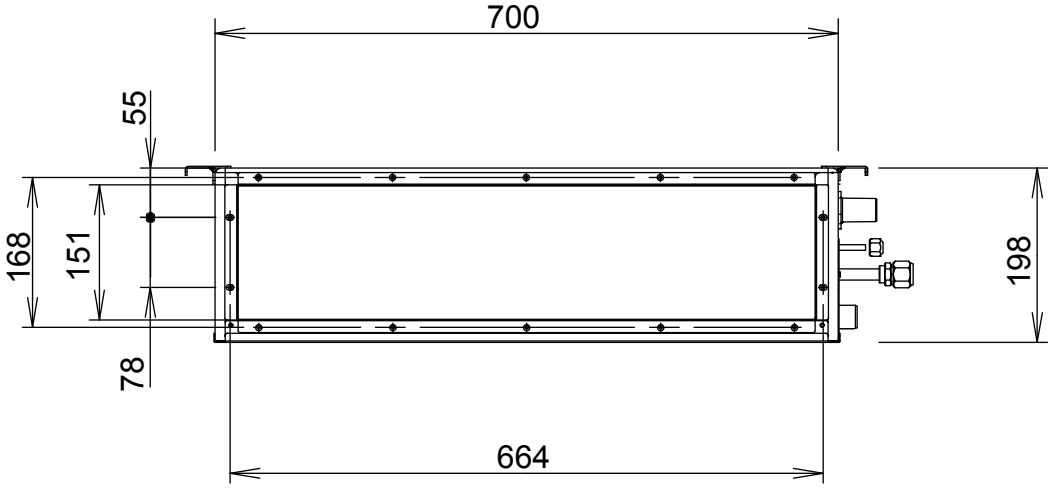

2012.02.28 add

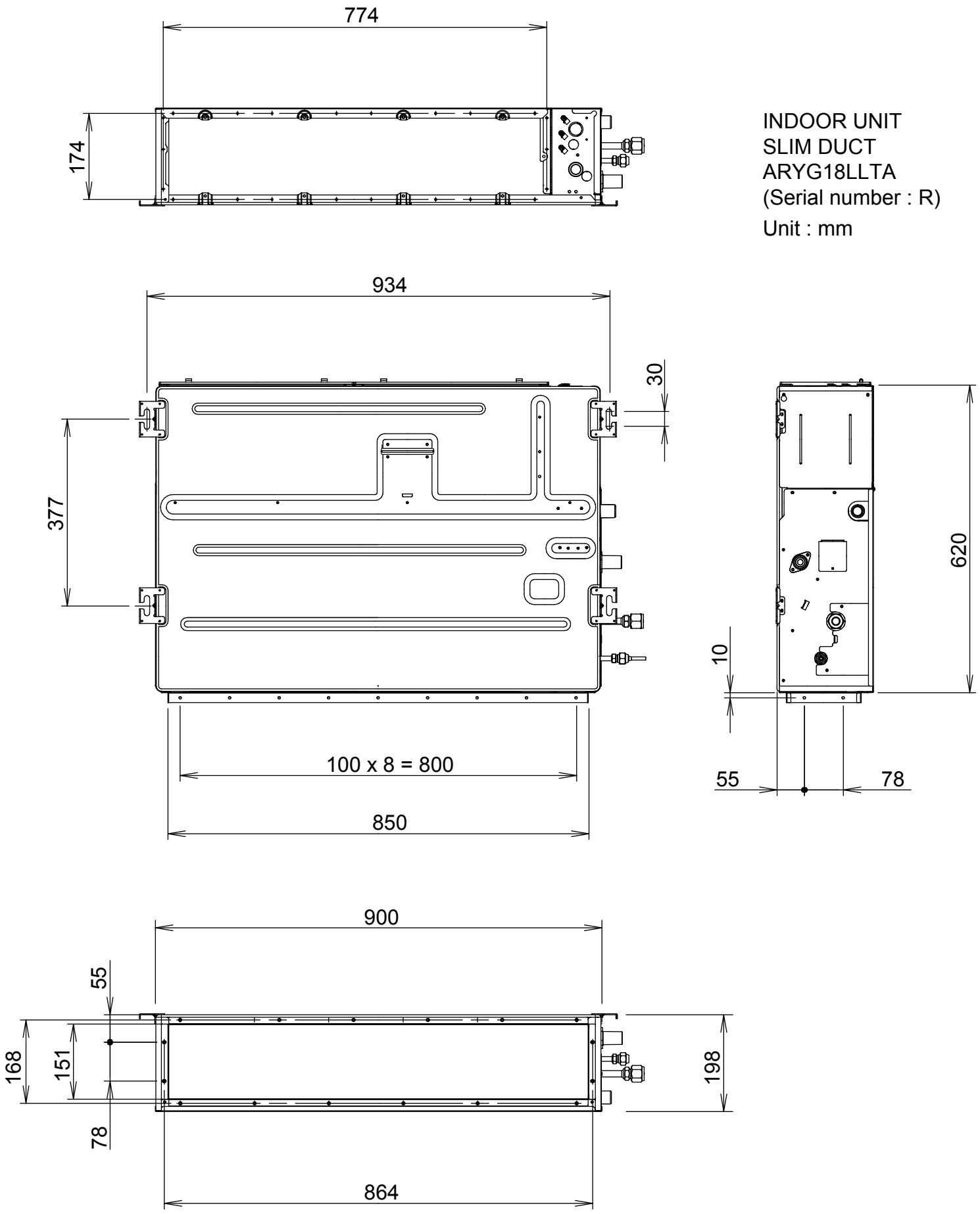

INDOOR UNIT
SLIM DUCT
ARYG18LLTA
(Serial number : R)
Unit : mm

2012.02.28

add

INDOOR UNIT
ABYG14LVTA
ABYG18LVTA

Unit : mm

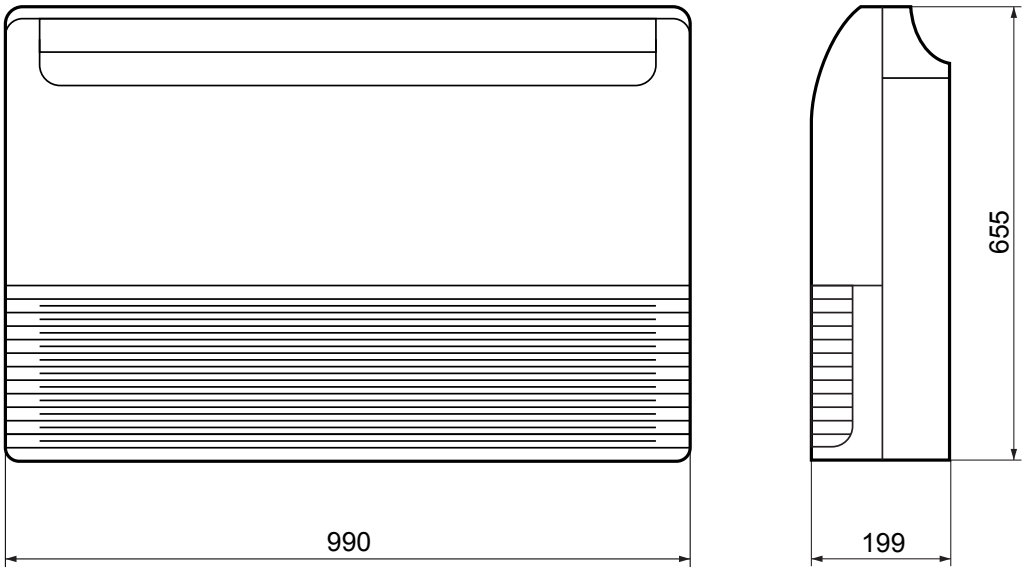

Rear view

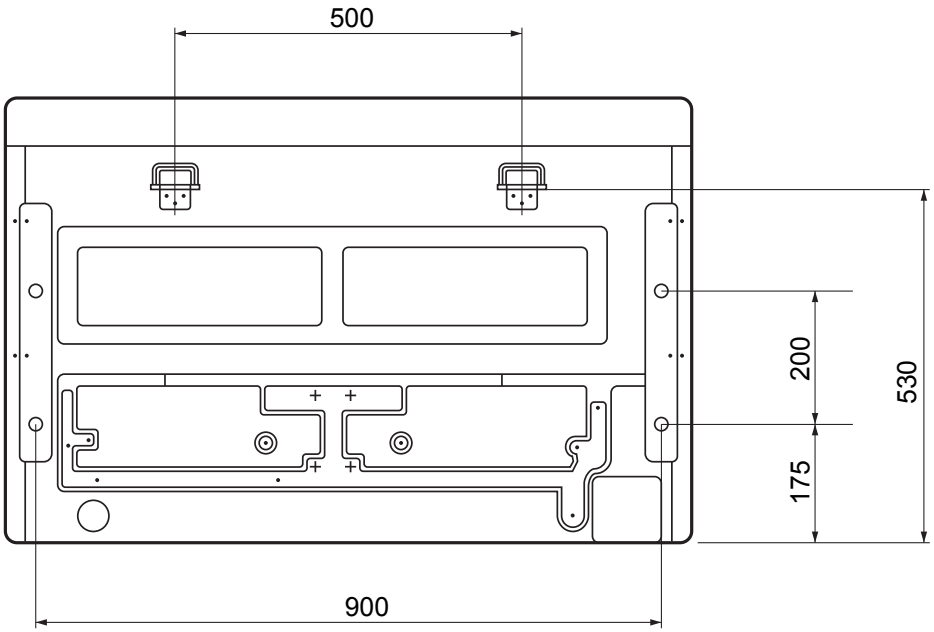

REFRIGERANT SYSTEM DIAGRAM

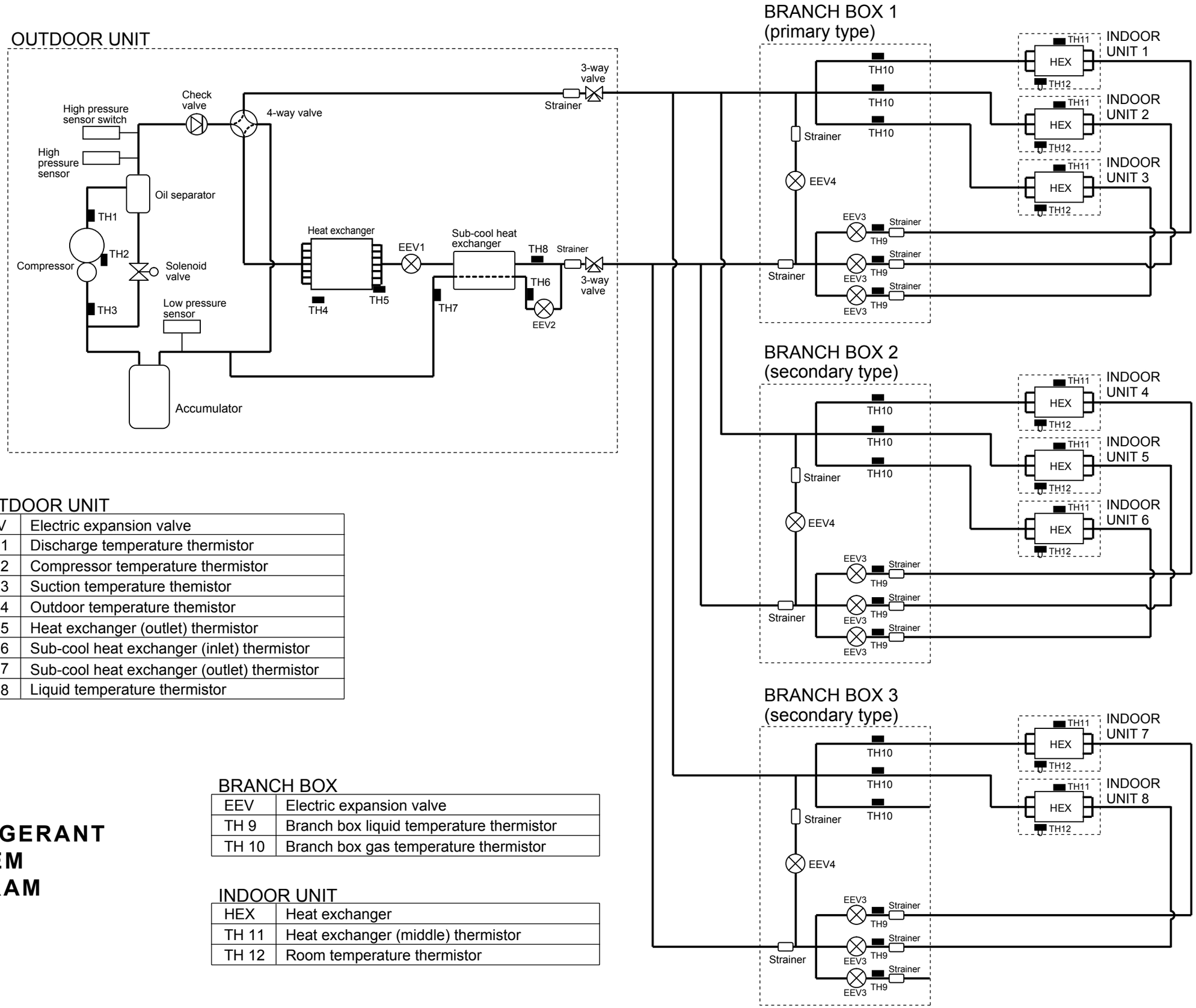

OUTDOOR UNIT

EEV	Electric expansion valve
TH 1	Discharge temperature thermistor
TH 2	Compressor temperature thermistor
TH 3	Suction temperature themistor
TH 4	Outdoor temperature themistor
TH 5	Heat exchanger (outlet) thermistor
TH 6	Sub-cool heat exchanger (inlet) thermistor
TH 7	Sub-cool heat exchanger (outlet) thermistor
TH 8	Liquid temperature thermistor

BRANCH BOX

EEV	Electric expansion valve
TH 9	Branch box liquid temperature thermistor
TH 10	Branch box gas temperature thermistor

INDOOR UNIT

HEX	Heat exchanger
TH 11	Heat exchanger (middle) thermistor
TH 12	Room temperature thermistor

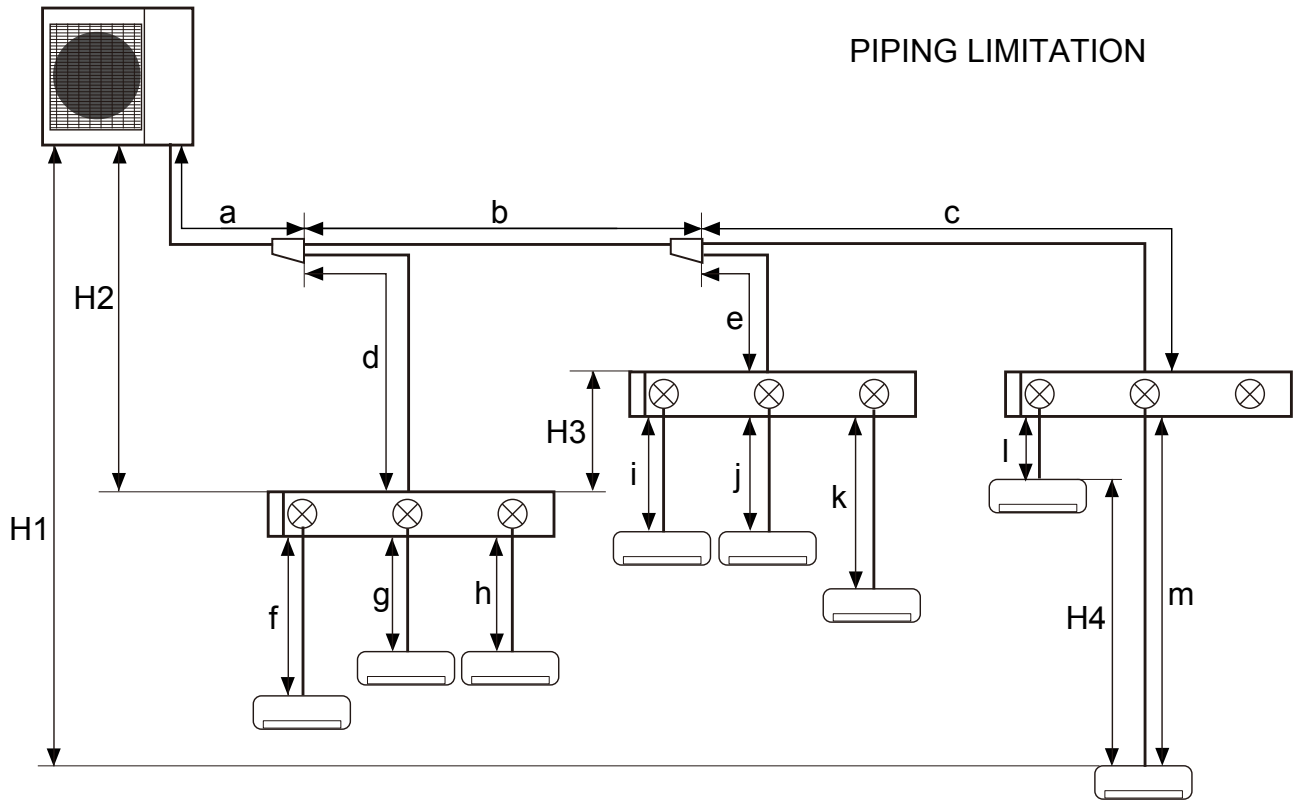

PIPE LENGTH

Total pipe length		Less than 115 m	Total
Between outdoor unit and the farthest indoor unit		Less than 70 m	a + b + c + m
Between outdoor unit and branch boxes		Less than 55 m	a + b + c + d + e
Between branch box and indoor unit	Total	Less than 60 m	f + g + h + i + j + k + l + m
	Each unit	3 to 15 m	f, g, h, i, j, k, l, m
Between outdoor unit and the first separation tube		More than 5 m	a
Between outdoor unit and branch box (When there is no separation tube)		More than 5 m	a + d

HEIGHT DIFFERENCE

Between outdoor unit and indoor unit	Less than 30 m	H1
Between outdoor unit and branch box	Less than 30 m	H2
Between branch boxes	Less than 15 m	H3
Between indoor units	Less than 15 m	H4

ADDITIONAL CHARGE

Liquid pipe diameter	Additional charge
∅ 6.35 mm	21 g/m
∅ 9.52 mm	58 g/m

Additional refrigerant depends on the liquid pipe diameter.

PIPE DIAMETER

	AOYG45LAT8	Branch box (Outdoor side)	Branch box (Indoor side)	ASYG07,09,12LJCA AUYG07,09,12LVLA ARYG07,09,12LVCA	ASYG18LFCA AUYG14,18LVLA ARYG18LLTA	ASYG24LFCA
Liquid pipe	9.52 mm		6.35 mm			
Gas pipe	15.88 mm		12.7 mm	9.52 mm	12.7 mm	15.88 mm

CIRCUIT DIAGRAM

OUTDOOR UNIT
AOYG45LAT8

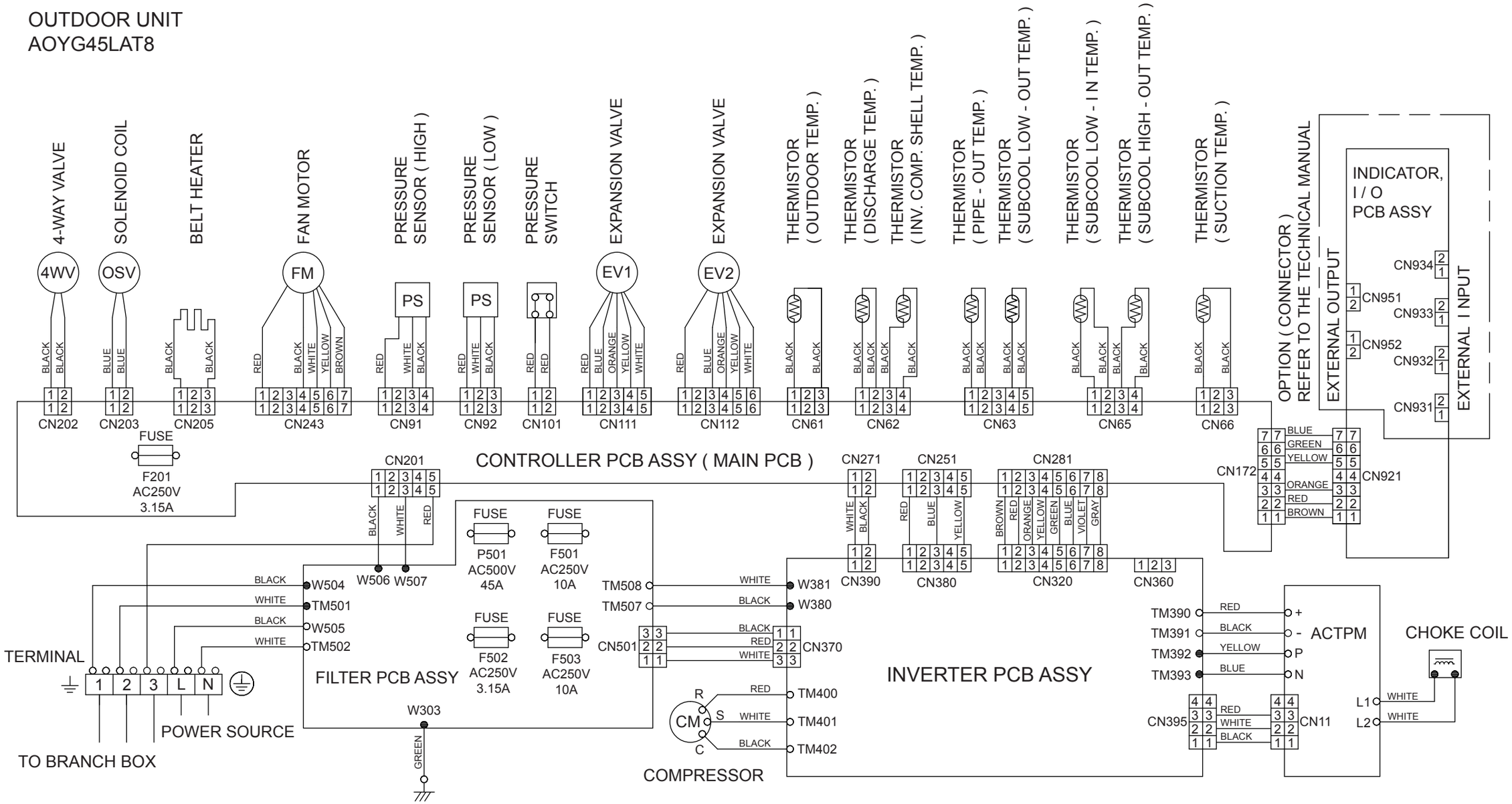

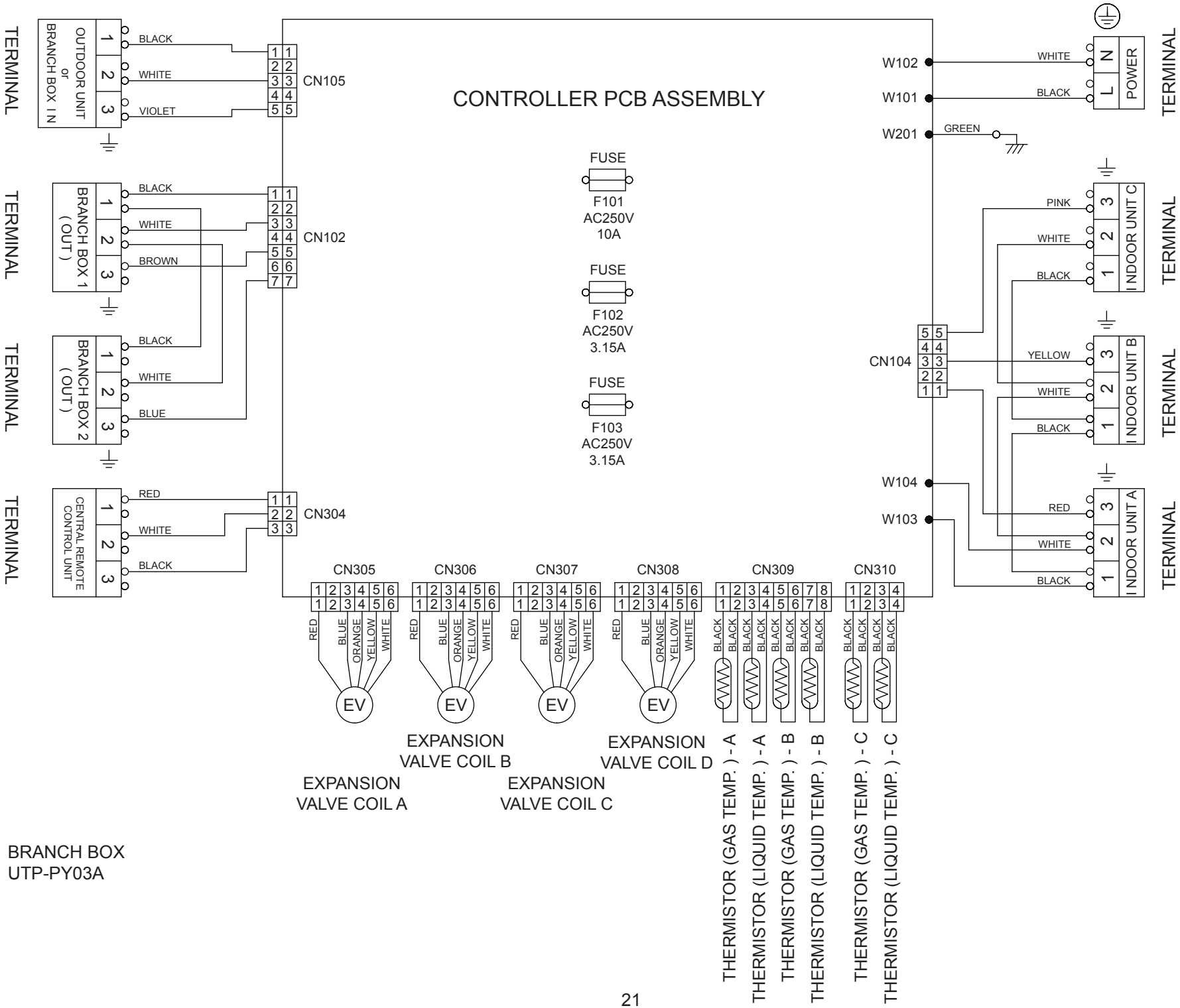

BRANCH BOX
UTP-PY03A

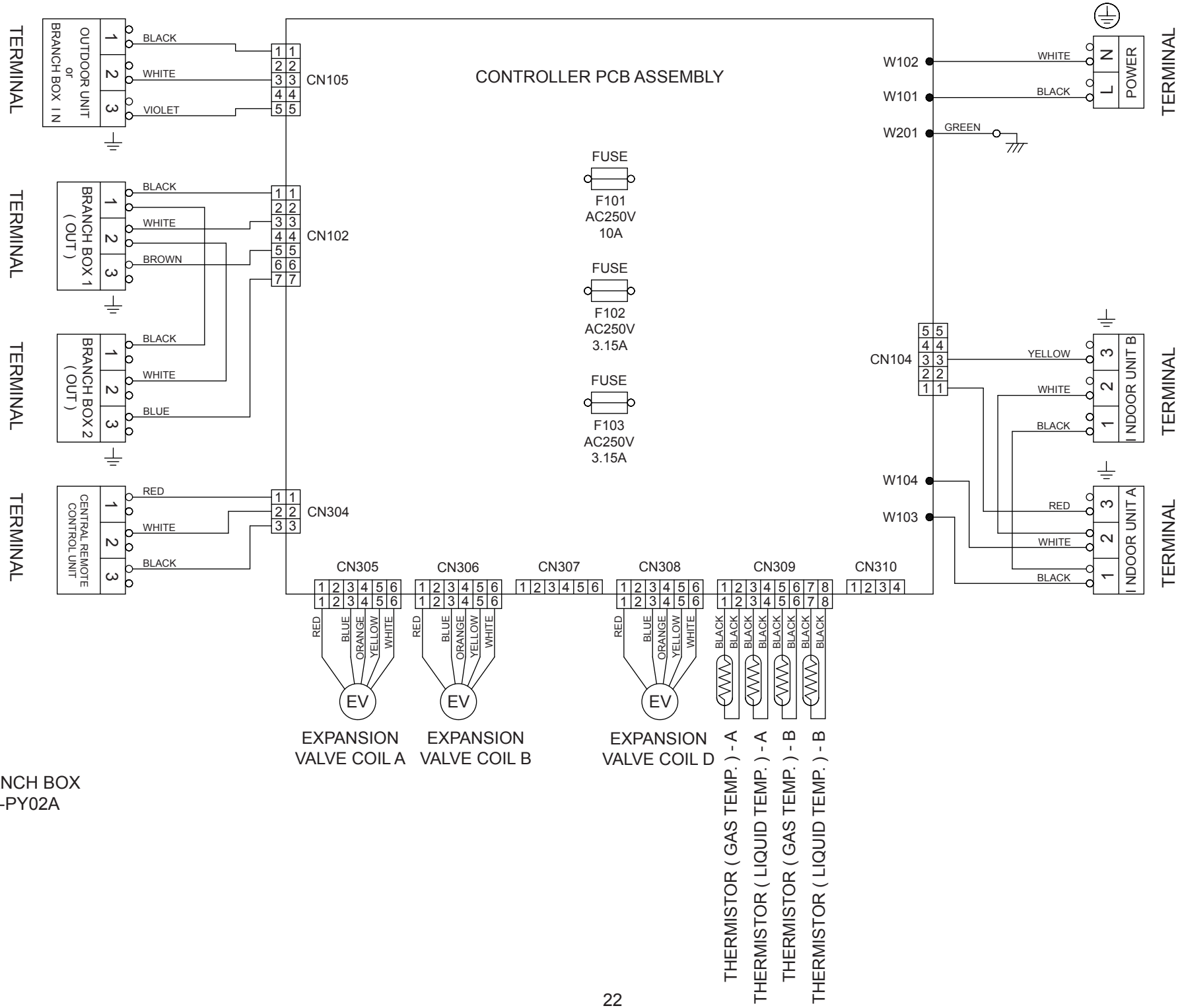

BRANCH BOX
UTP-PY02A

INDOOR UNIT
COMPACT WALL MOUNTED
ASYG07LJCA
ASYG09LJCA
ASYG12LJCA

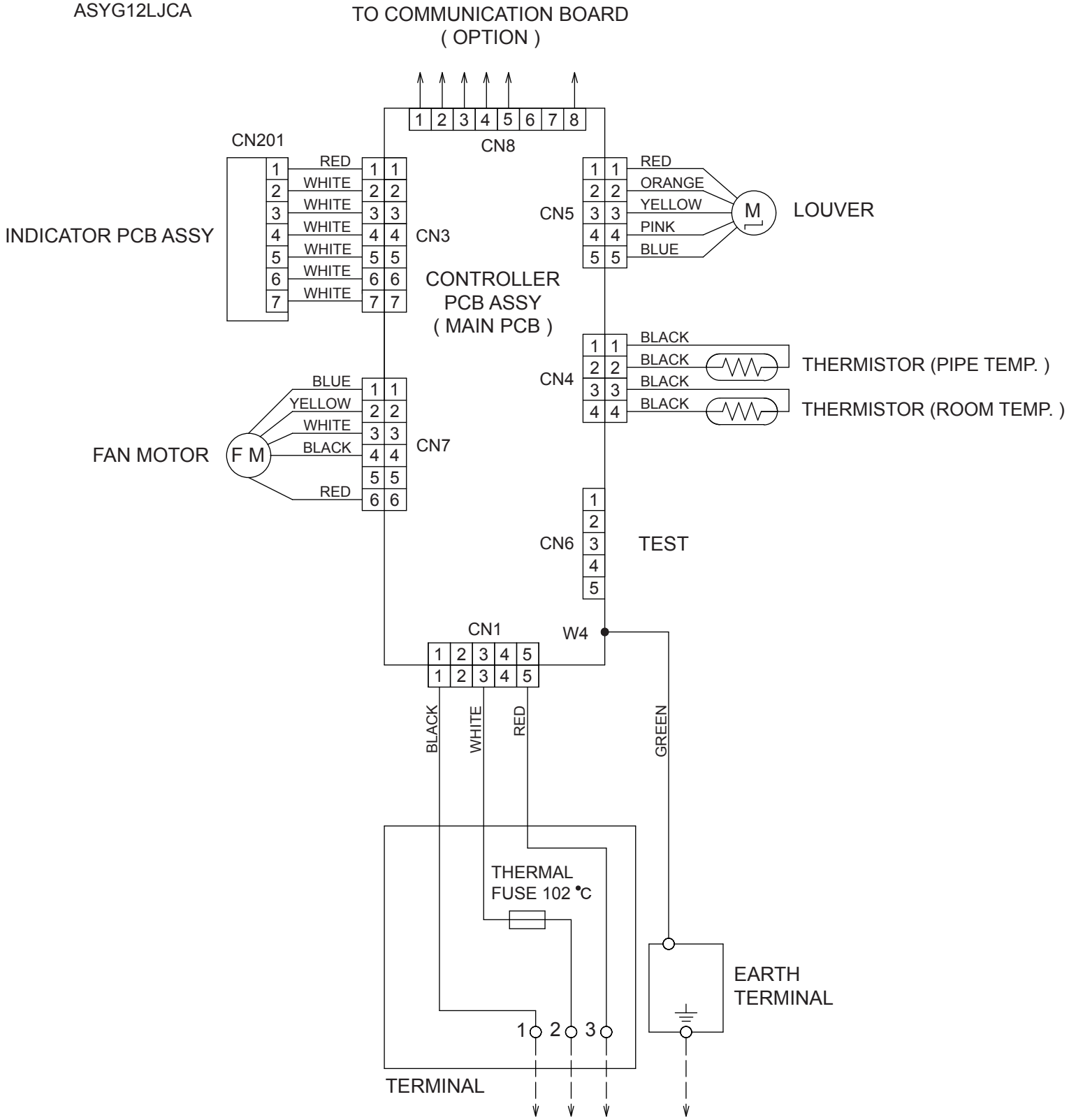

COMMUNICATION KIT
UTY-XCBXZ1

The limitation is option of ASYG07, 09 and 12LJCA

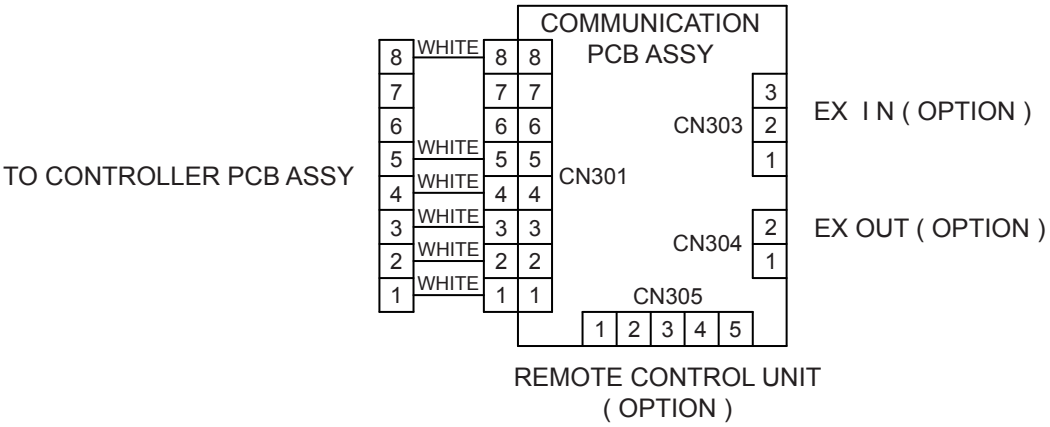

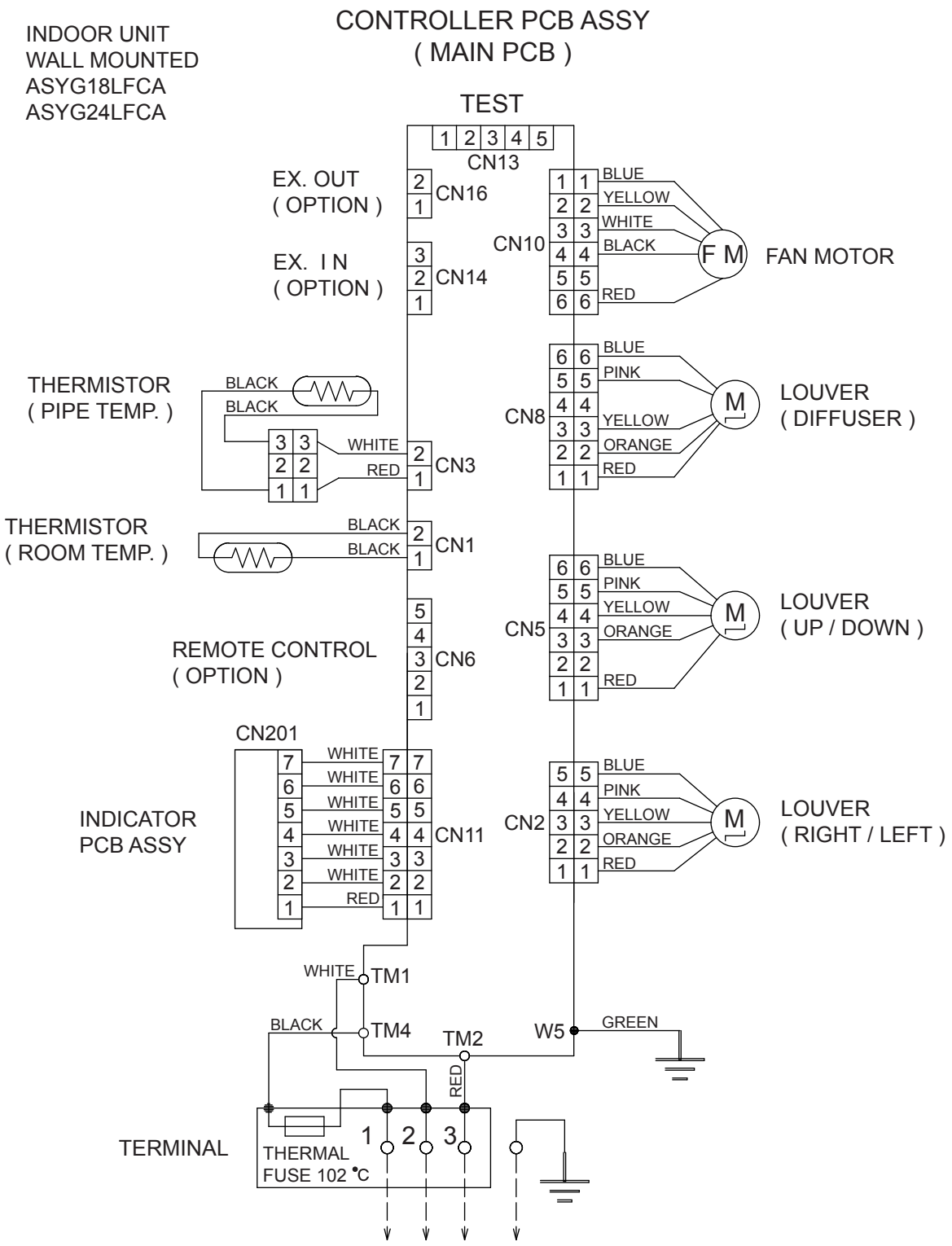
INDOOR UNIT
WALL MOUNTED
ASYG18LFCA
ASYG24LFCA
CONTROLLER PCB ASSY
(MAIN PCB)
TEST
CN13
EX. OUT
(OPTION)
CN16
EX. I N
(OPTION)
CN14
CN10
BLUE
YELLOW
WHITE
BLACK
RED
F M
FAN MOTOR
THERMISTOR
(PIPE TEMP.)
BLACK
BLACK
WHITE
RED
CN3
CN8
BLUE
PINK
YELLOW
ORANGE
RED
M
LOUVER
(DIFFUSER)
THERMISTOR
(ROOM TEMP.)
BLACK
BLACK
CN1
REMOTE CONTROL
(OPTION)
CN6
CN5
BLUE
PINK
YELLOW
ORANGE
RED
M
LOUVER
(UP / DOWN)
CN201
INDICATOR
PCB ASSY
WHITE
WHITE
WHITE
WHITE
WHITE
WHITE
RED
CN11
CN2
BLUE
PINK
YELLOW
ORANGE
RED
M
LOUVER
(RIGHT / LEFT)
WHITE
TM1
BLACK
TM4
TM2
W5
GREEN
RED
TERMINAL
THERMAL
FUSE 102 °C
1
2
3

INDOOR UNIT
COMPACT CASSETTE
AUYG07LVLA
AUYG09LVLA
AUYG12LVLA
AUYG14LVLA
AUYG18LVLA

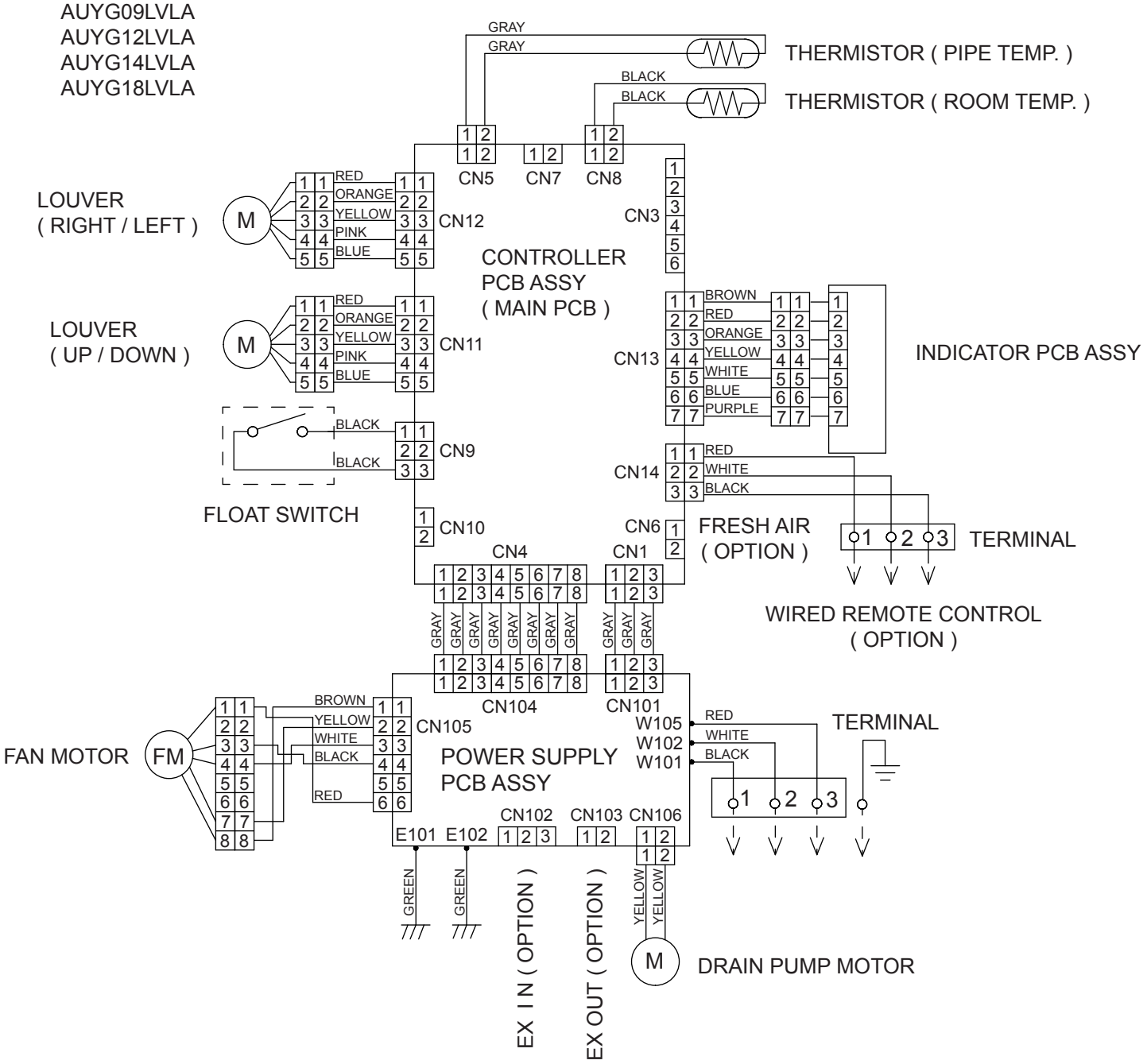

INDOOR UNIT
FLOOR
AGYG09LVCA
AGYG12LVCA
AGYG14LVCA

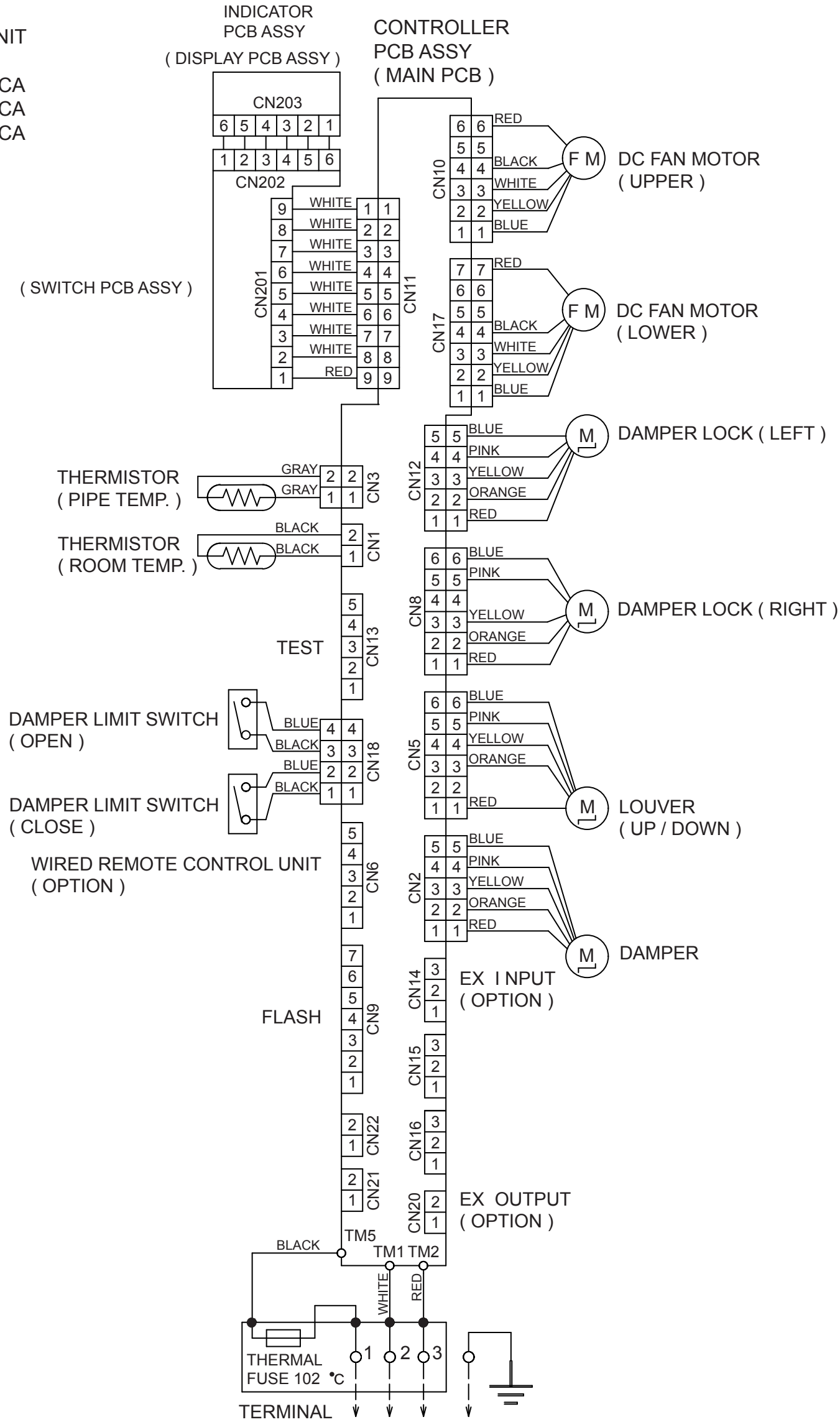

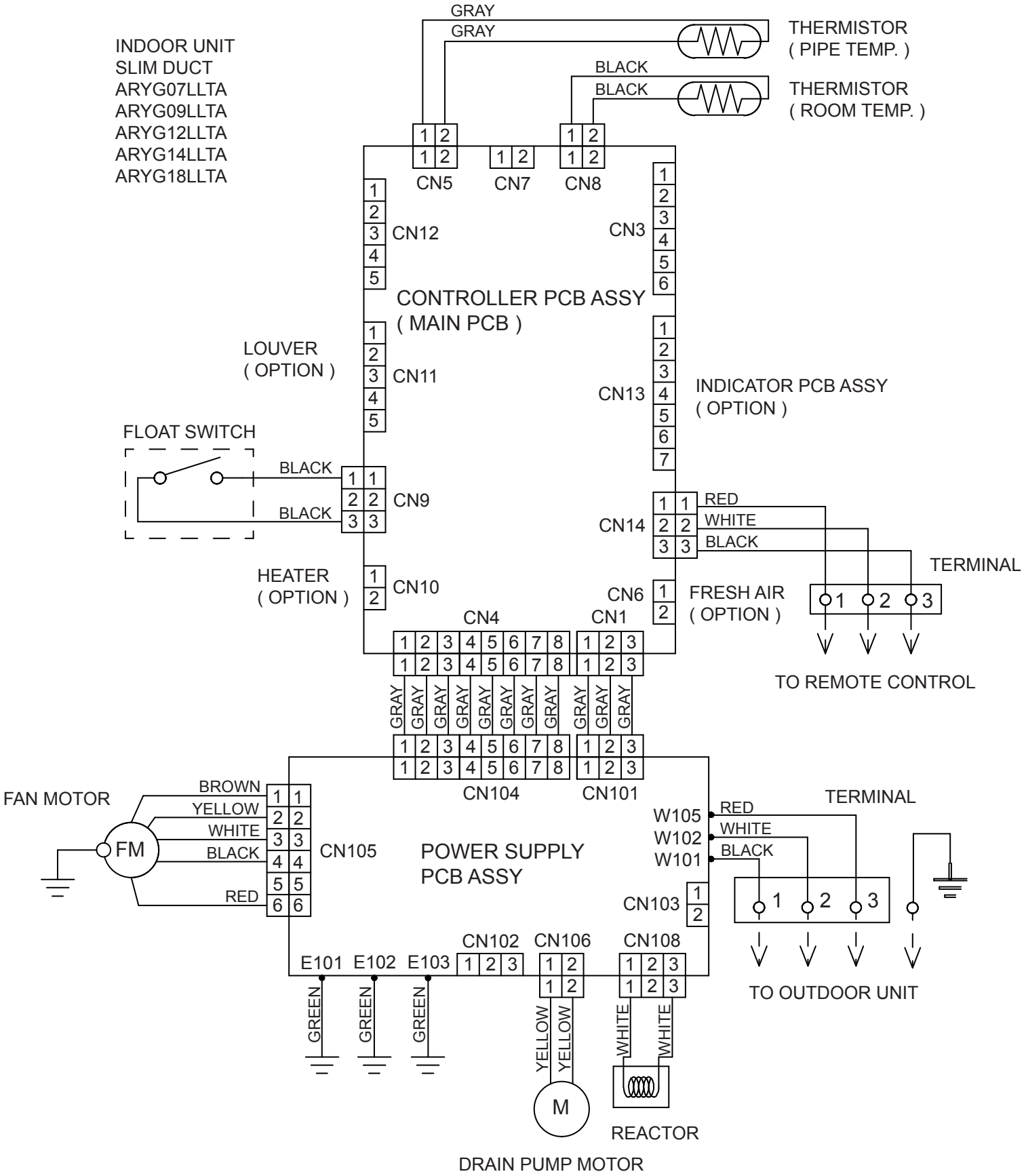
INDOOR UNIT
SLIM DUCT
ARYG07LLTA
ARYG09LLTA
ARYG12LLTA
ARYG14LLTA
ARYG18LLTA
GRAY
GRAY
THERMISTOR
(PIPE TEMP.)
BLACK
BLACK
THERMISTOR
(ROOM TEMP.)
CN5
CN7
CN8
CN12
CN3
CONTROLLER PCB ASSY
(MAIN PCB)
LOUVER
(OPTION)
CN11
CN13
INDICATOR PCB ASSY
(OPTION)
FLOAT SWITCH
BLACK
BLACK
CN9
CN14
RED
WHITE
BLACK
TERMINAL
HEATER
(OPTION)
CN10
CN6
FRESH AIR
(OPTION)
CN4
CN1
TO REMOTE CONTROL
GRAY
CN104
CN101
FAN MOTOR
BROWN
YELLOW
WHITE
BLACK
RED
FM
CN105
POWER SUPPLY
PCB ASSY
W105
W102
W101
RED
WHITE
BLACK
TERMINAL
CN103
CN102
CN106
CN108
E101
E102
E103
GREEN
GREEN
GREEN
YELLOW
YELLOW
WHITE
WHITE
M
REACTOR
TO OUTDOOR UNIT
DRAIN PUMP MOTOR

INDOOR UNIT
FLOOR / CEILING
ABYG14LVTA
ABYG18LVTA

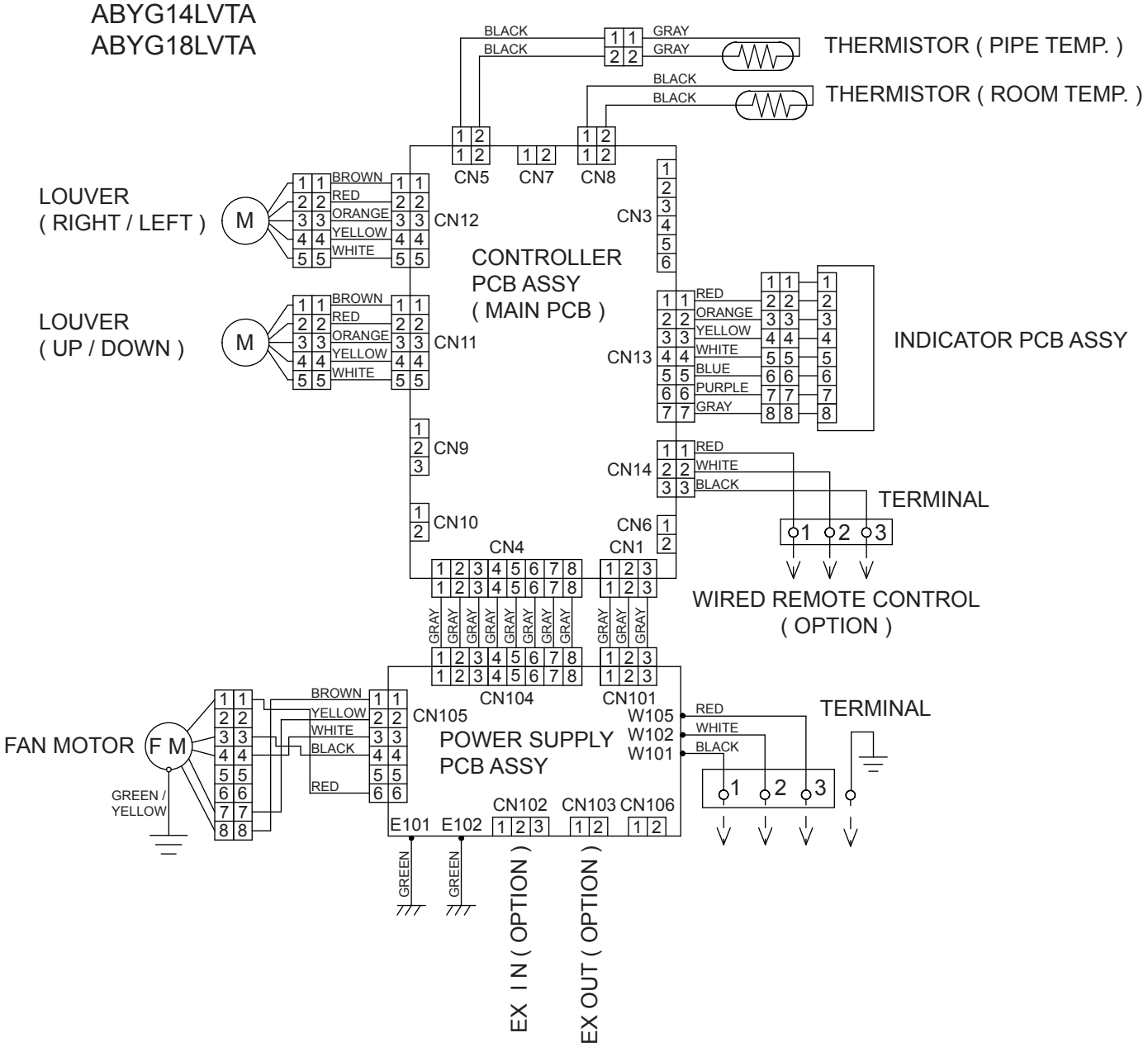

OUTDOOR PCB CIRCUIT DIAGRAM

AOYG45LAT8

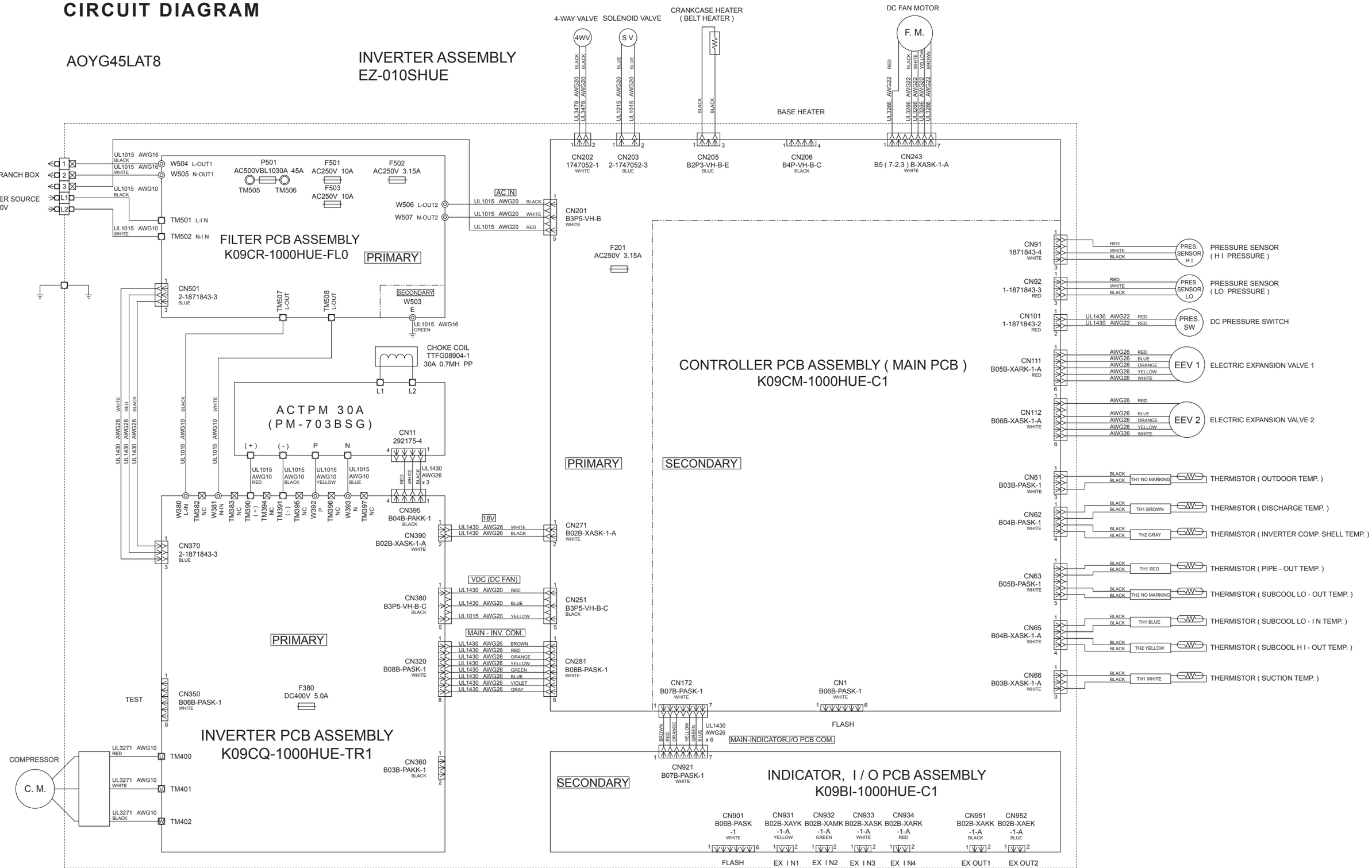

OUTDOOR UNIT
AOYG45LAT8

CONTROLLER PCB ASSEMBLY (MAIN PCB) : PRIMAY
K09CM-1000HUE-C1

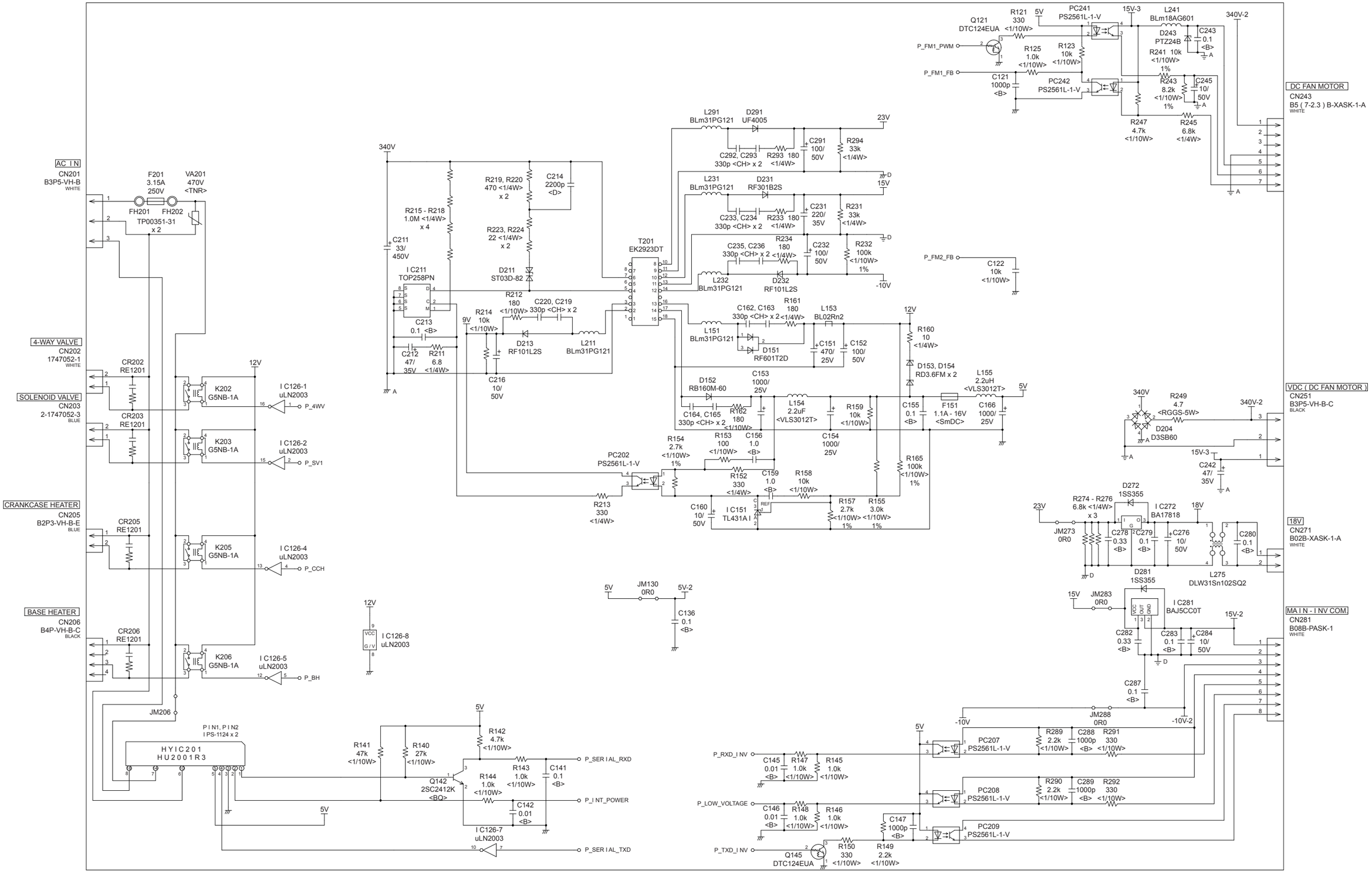

OUTDOOR UNIT
AOYG45LAT8

CONTROLLER PCB ASSEMBLY (MAIN PCB) : SECONDARY
K09CM-0900HUE-C1

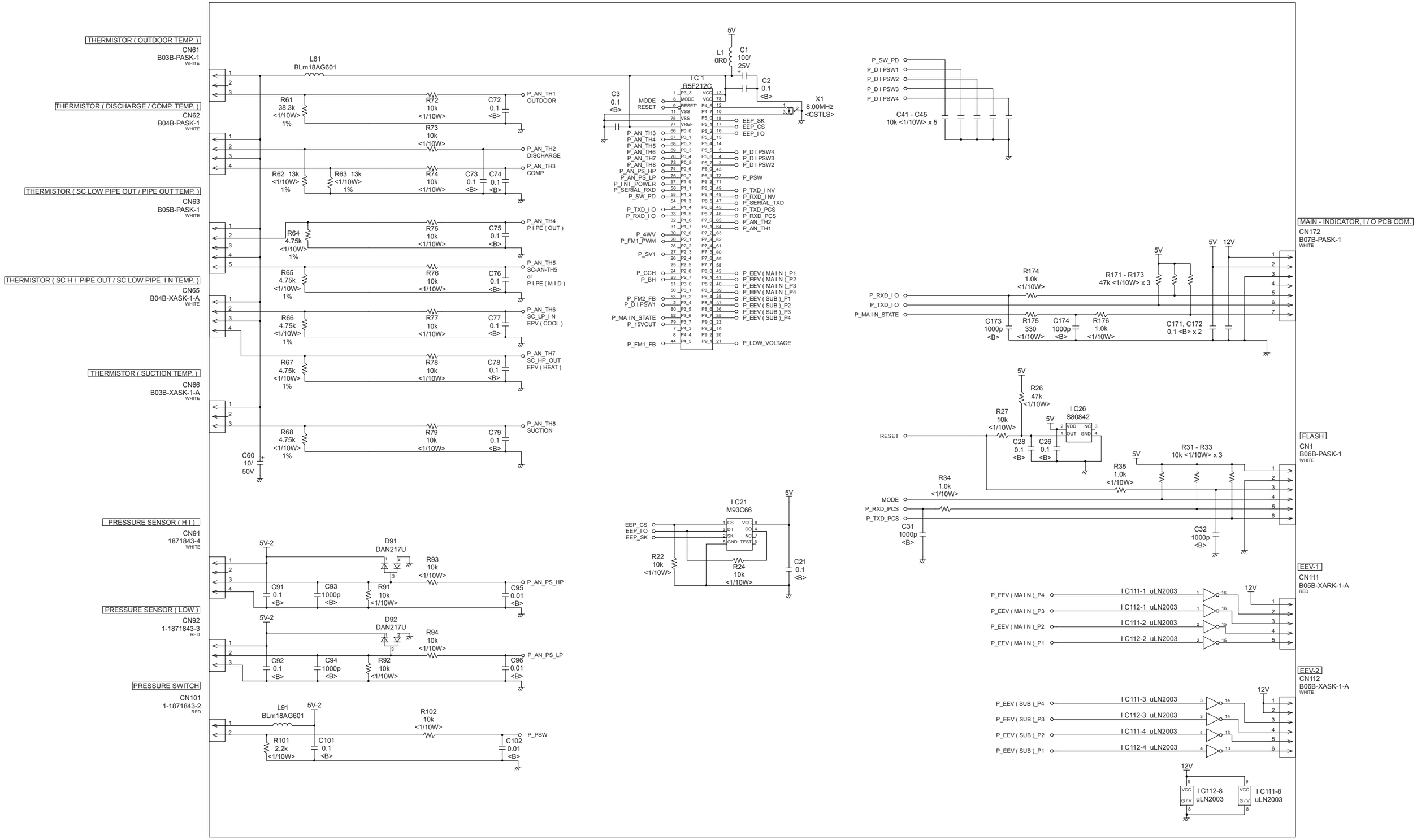

OUTDOOR UNIT
AOYG45LAT8

INVERTER PCB ASSEMBLY
K09CQ-1000HUE-TR1

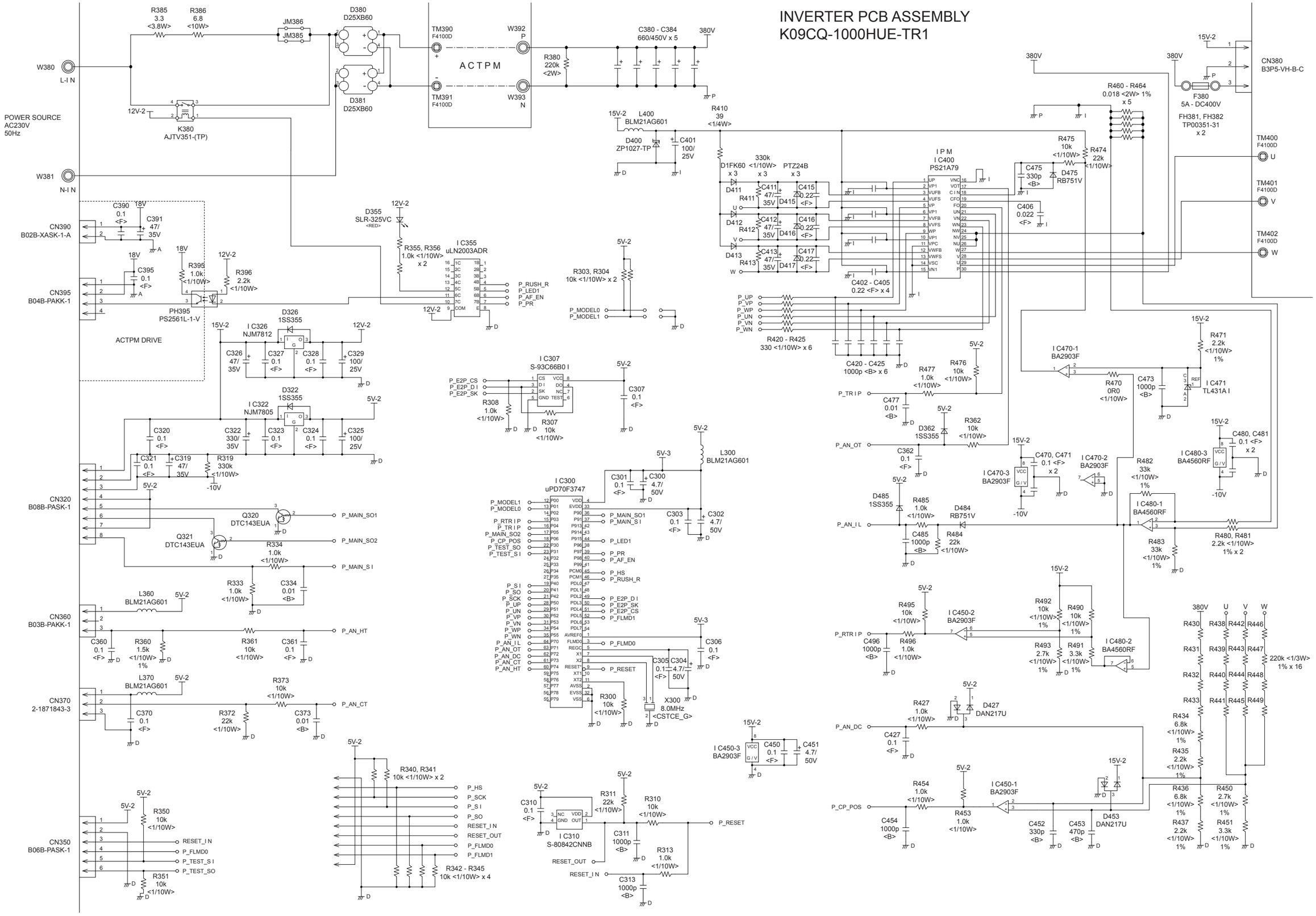

OUTDOOR UNIT
AOYG45LAT8

FILTER PCB ASSEMBLY
K09CR-1000HUE-FL0

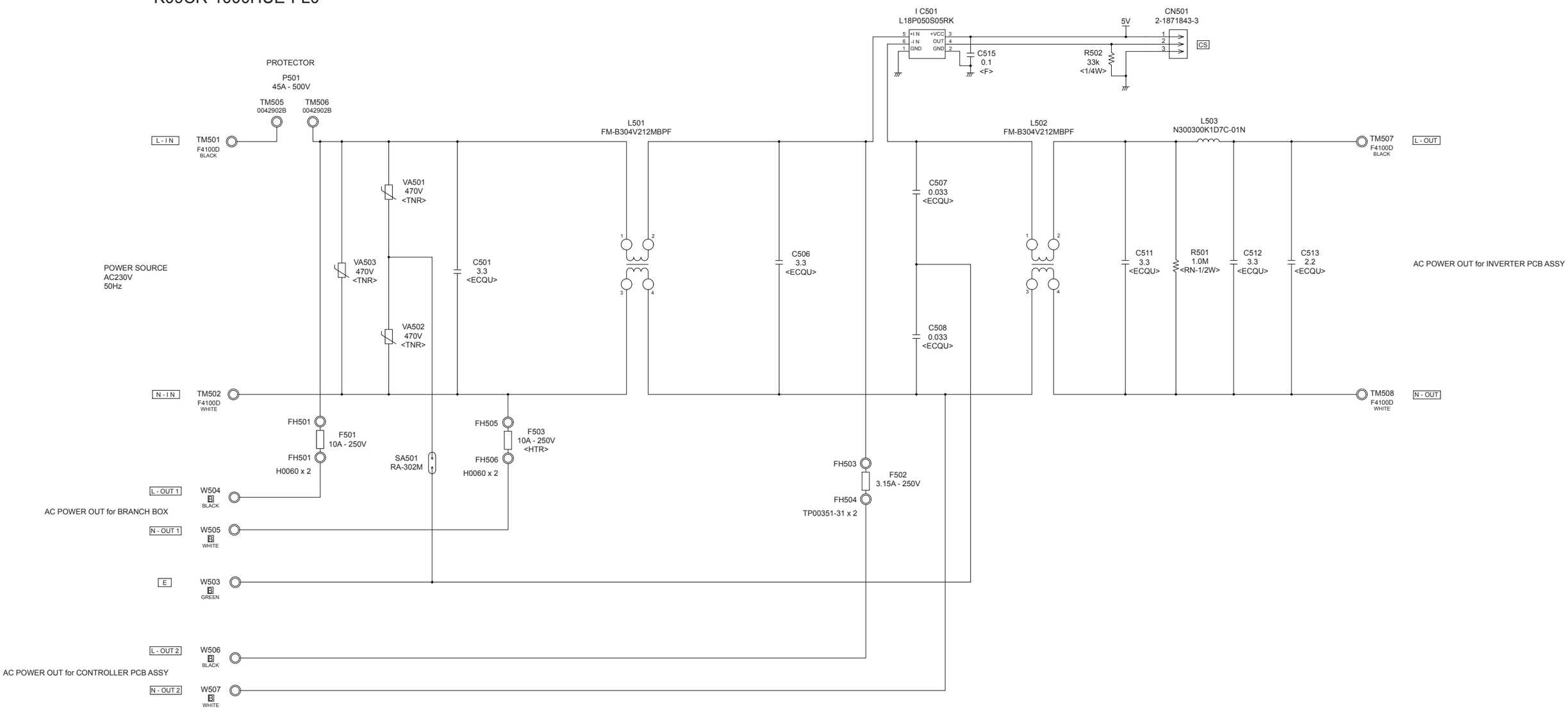

OUTDOOR UNIT
AOYG45LAT8

INDICATOR, I / O PCB ASSEMBLY
K09BI-1000HUE-C1

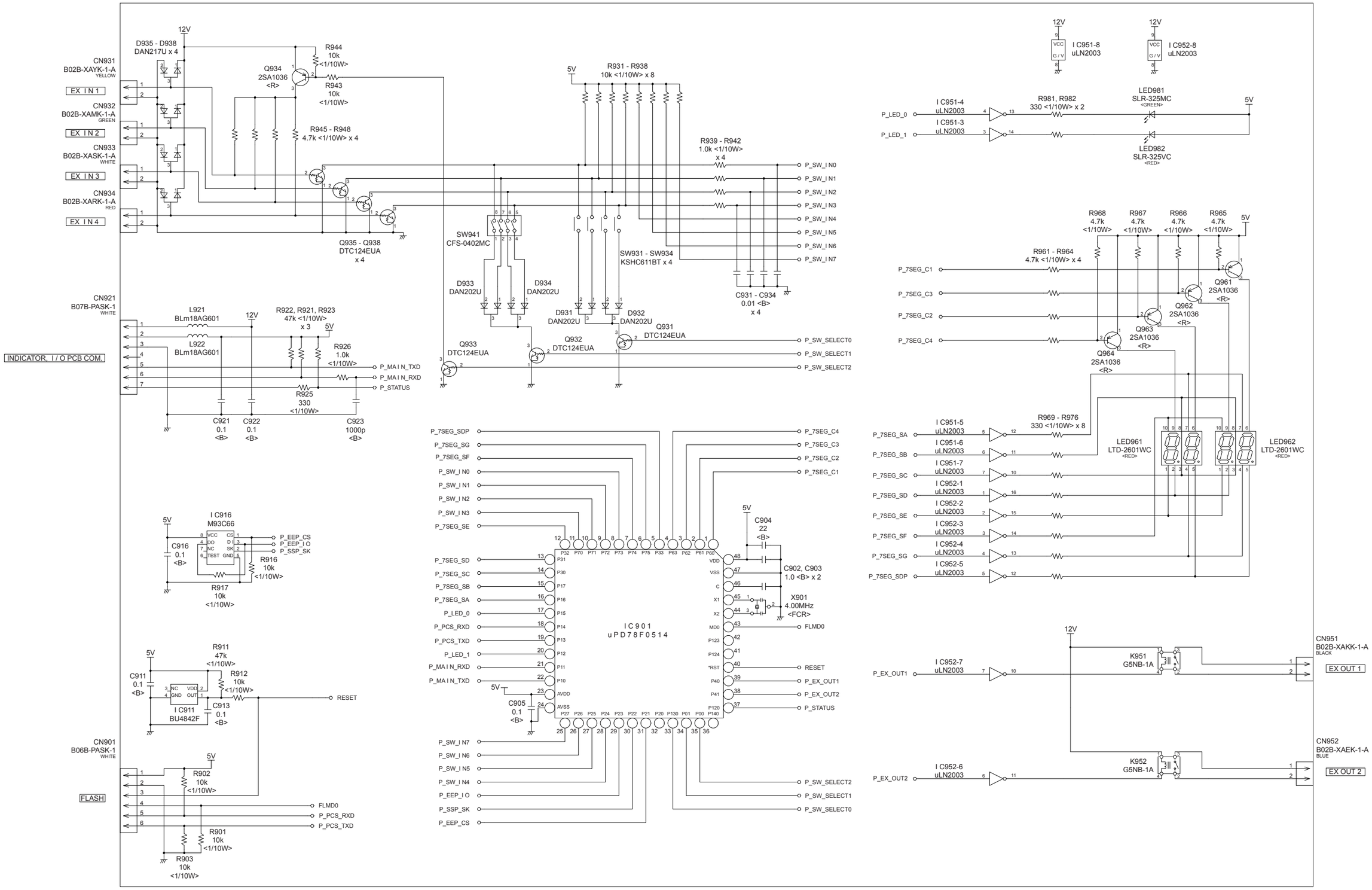

BRANCH BOX PCB CIRCUIT DIAGRAM

UTP-PY03A

CONTROL UNIT
EZ-0101HME

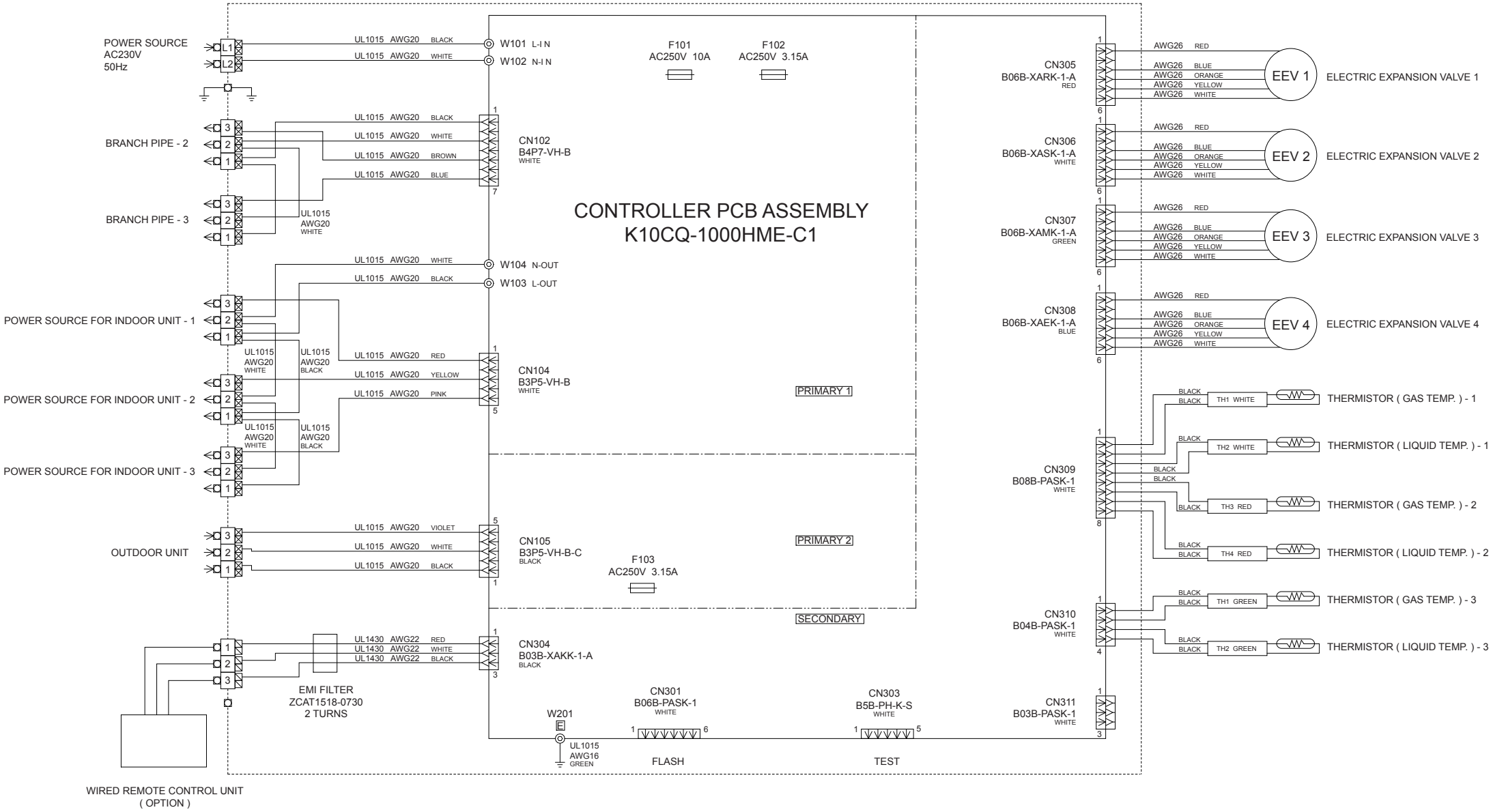

BRANCH BOX
UTP-PY02A

CONTROL UNIT
EZ-0102HME

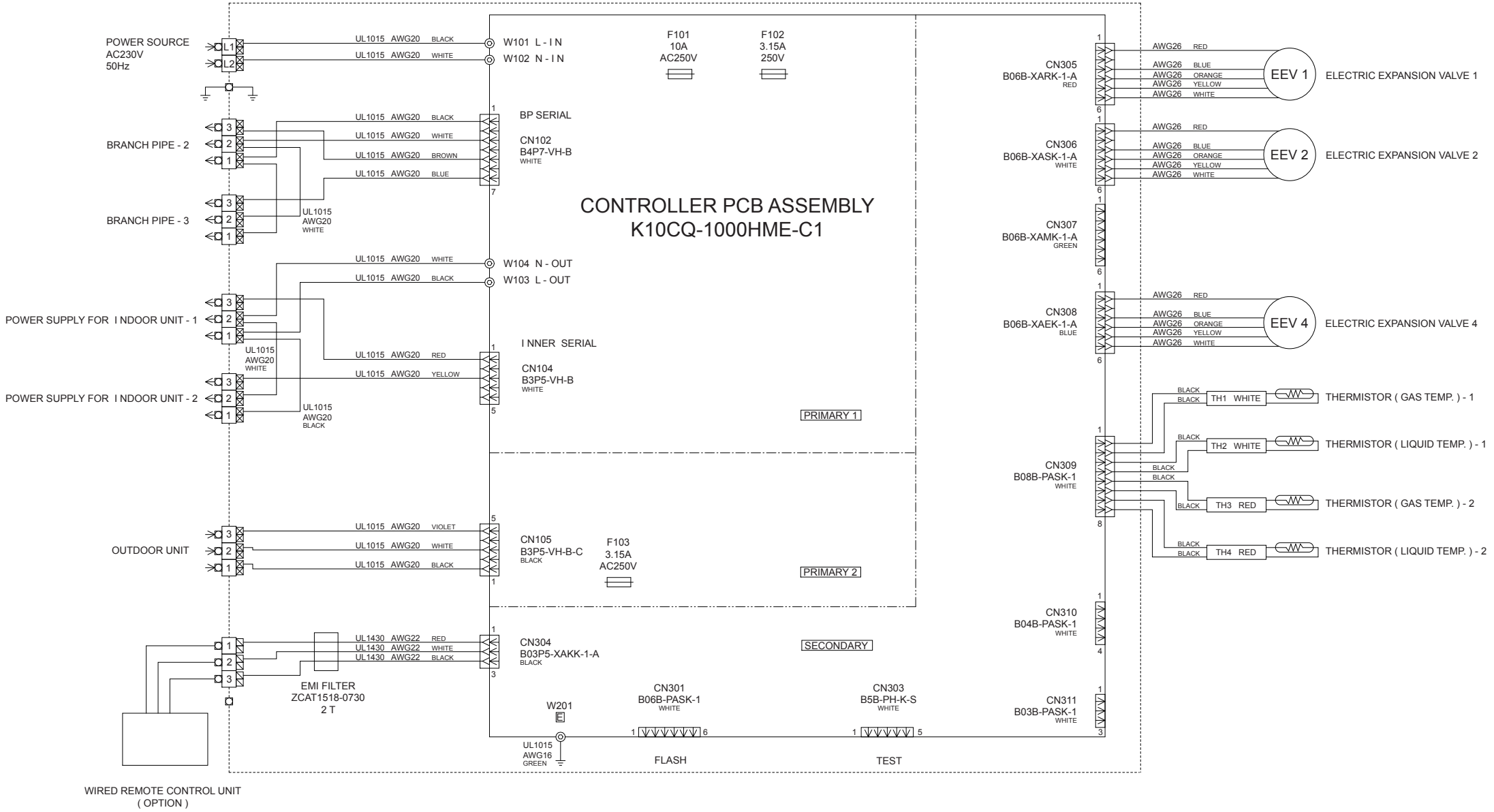

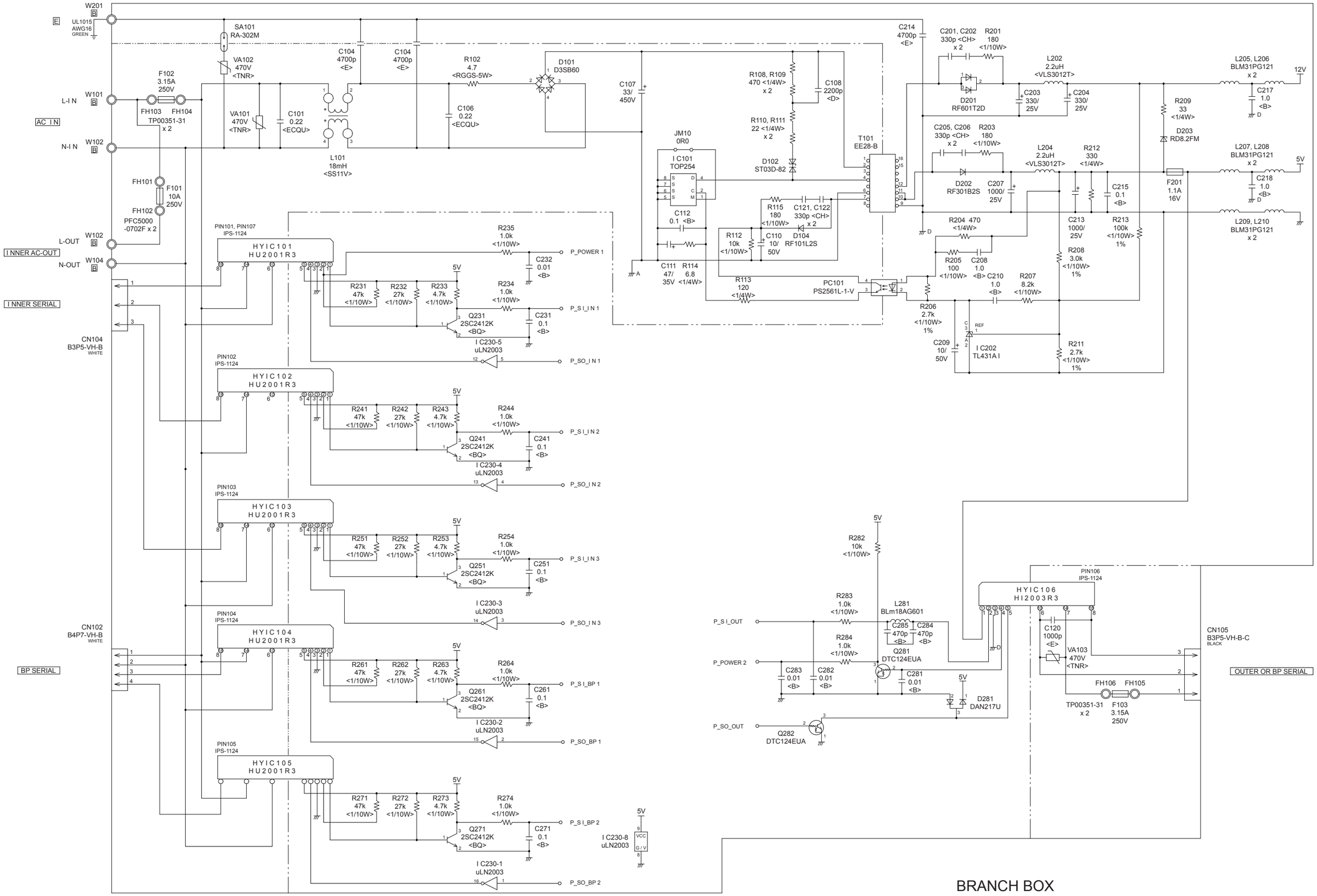

BRANCH BOX
UTP-PY03A
UTP-PY02A

CONTROLLER PCB ASSEMBLY - 1
K-10CQ-1000HME-C1

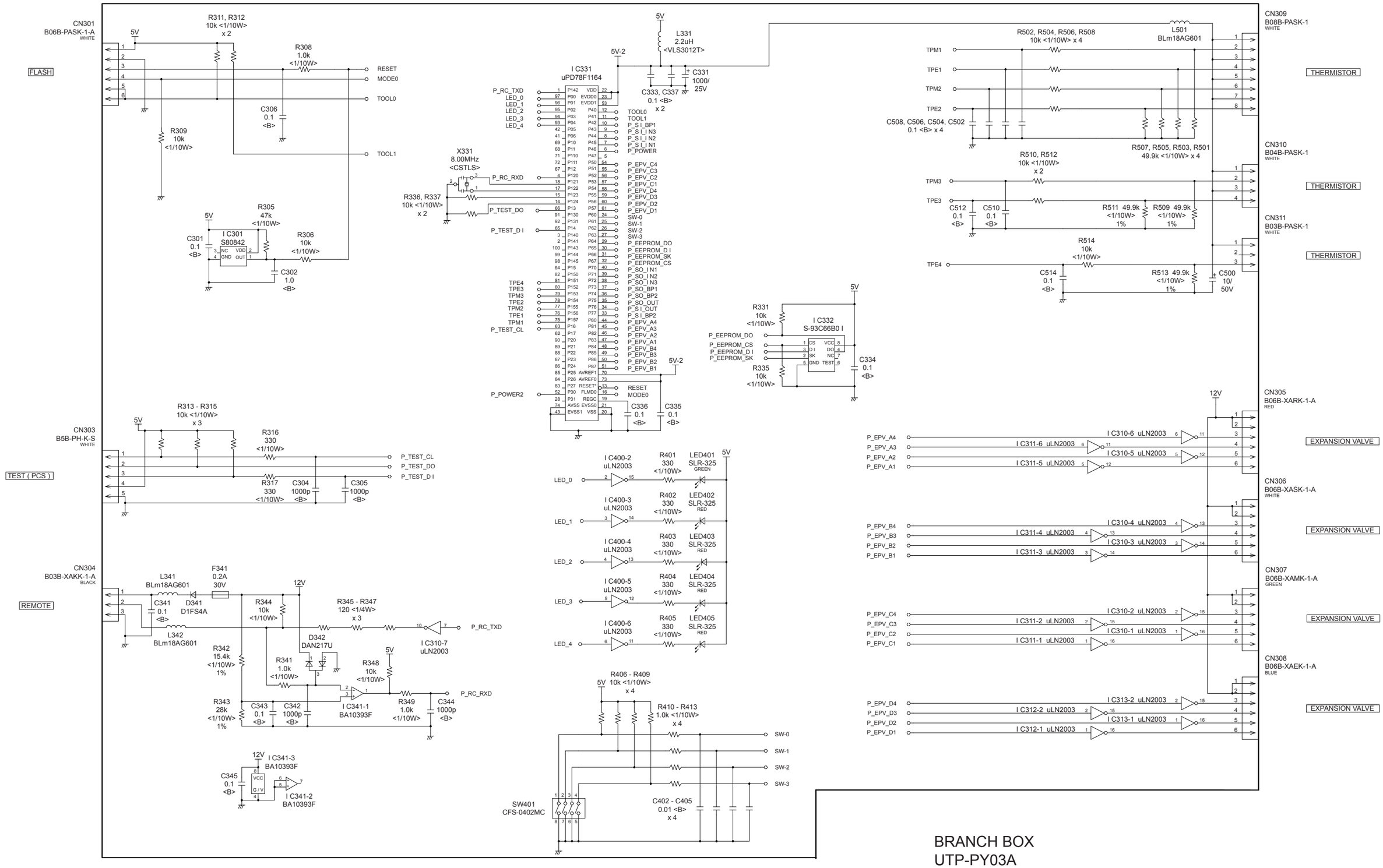

BRANCH BOX
UTP-PY03A
UTP-PY02A

CONTROLLER PCB ASSEMBLY - 2
K-10CQ-1000HME-C1

INDOOR PCB CIRCUIT DIAGRAM

CONTROL UNIT
ASYG07LJCA : EZ-010MHSE
ASYG09LJCA : EZ-010PHSE
ASYG12LJCA : EZ-010RHSE

CONTROLLER PCB ASSEMBLY (MAIN PCB)
ASYG07LJCA : K09DS-1006HSE-C1
ASYG09LJCA : K09DS-1007HSE-C1
ASYG12LJCA : K09DS-1008HSE-C1

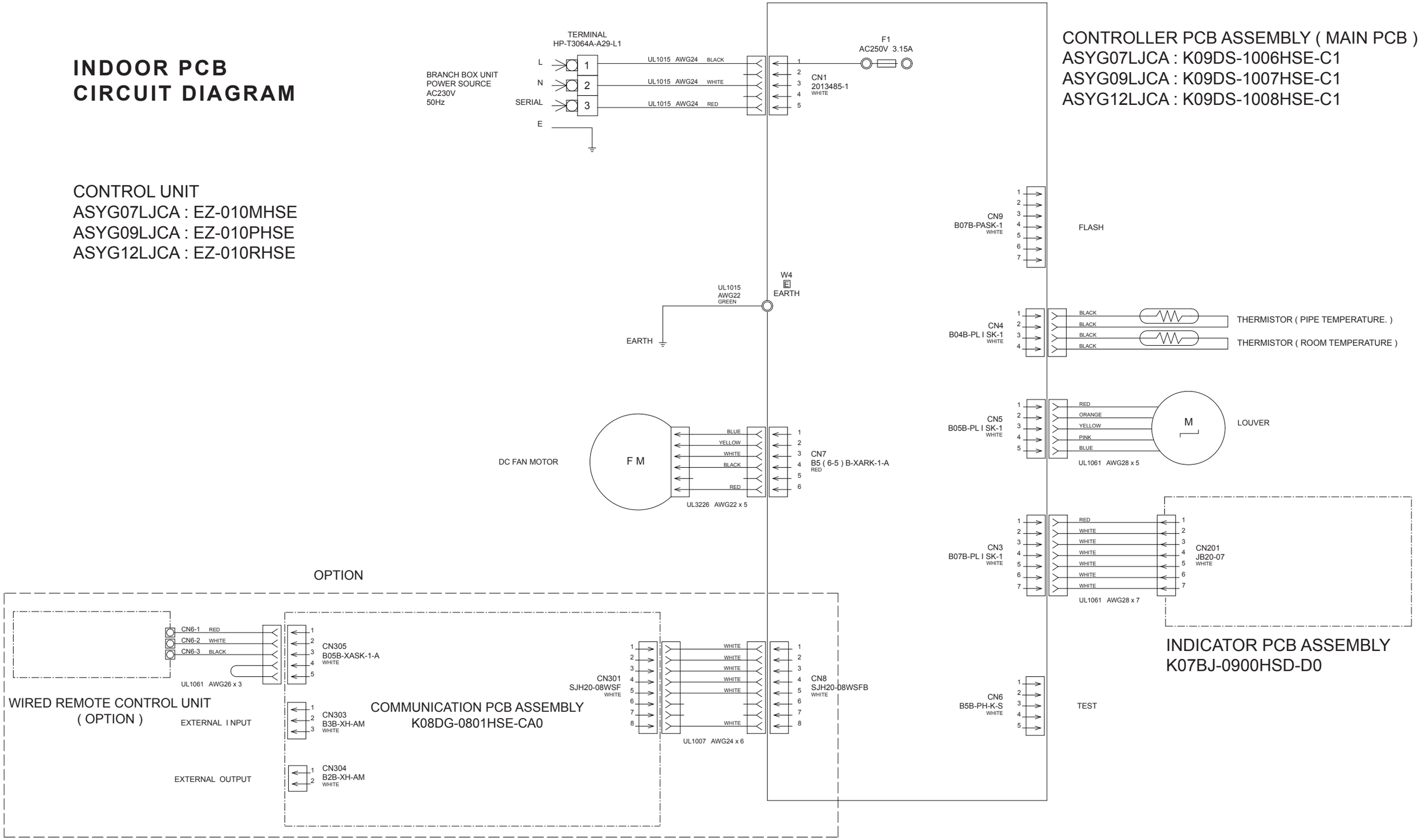

INDOOR UNIT
COMPACT WALL MOUNTED
CONTROLLER PCB ASSEMBLY (MAIN PCB)
ASYG07LJCA : K09DS-1006HSE-C1
ASYG09LJCA : K09DS-1007HSE-C1
ASYG12LJCA : K09DS-1008HSE-C1

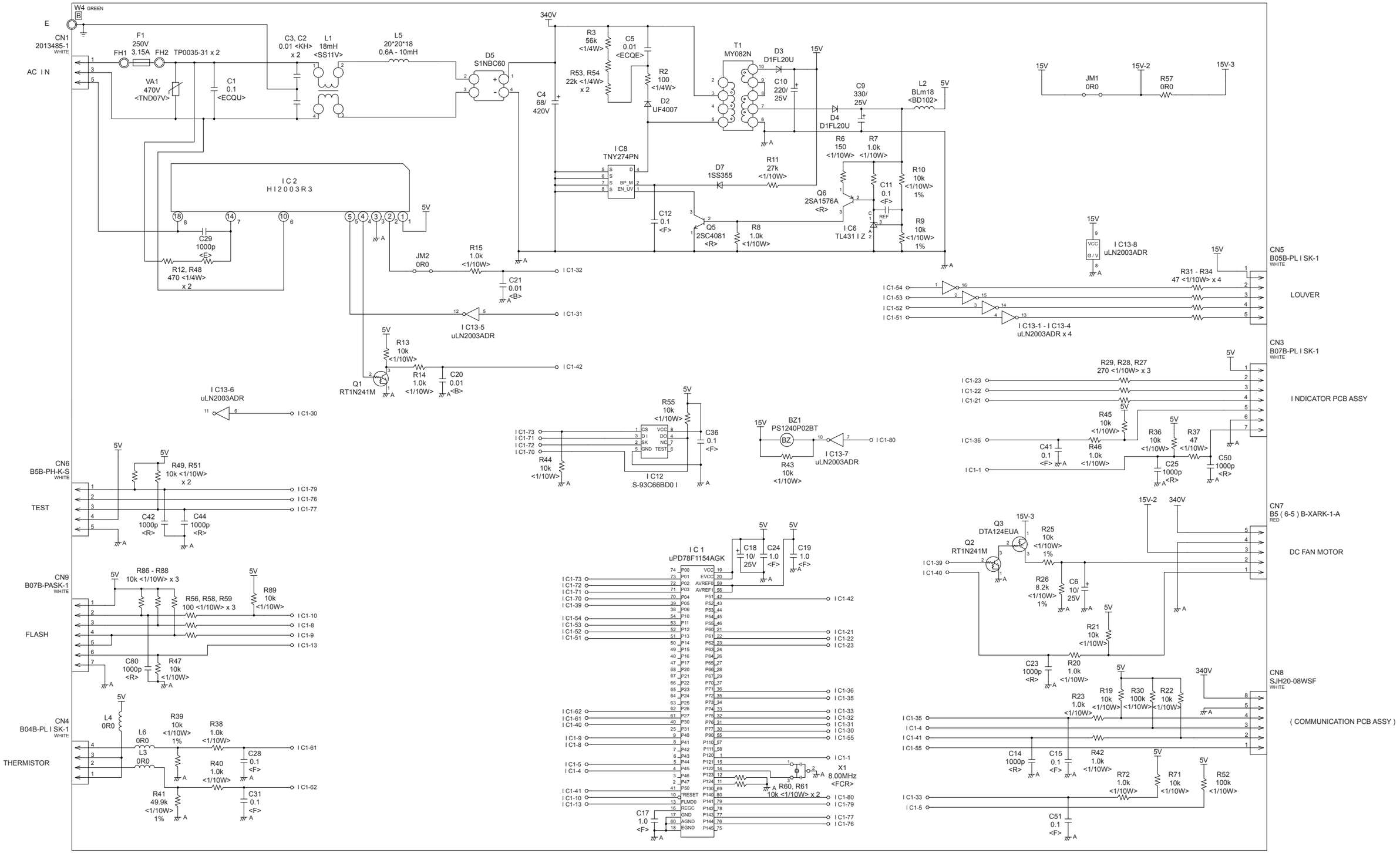

INDOOR UNIT
COMPACT WALL MOUNTED
ASYG07LJCA
ASYG09LJCA
ASYG12LJCA

INDICATOR PCB ASSEMBLY
K07BJ-0900HSD-D0

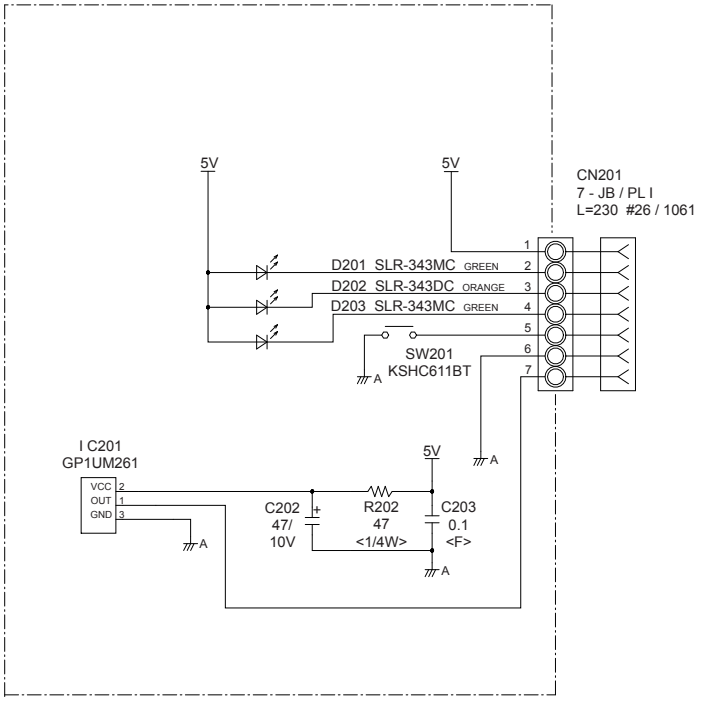

TO CONTROLLER PCB ASSENBLY

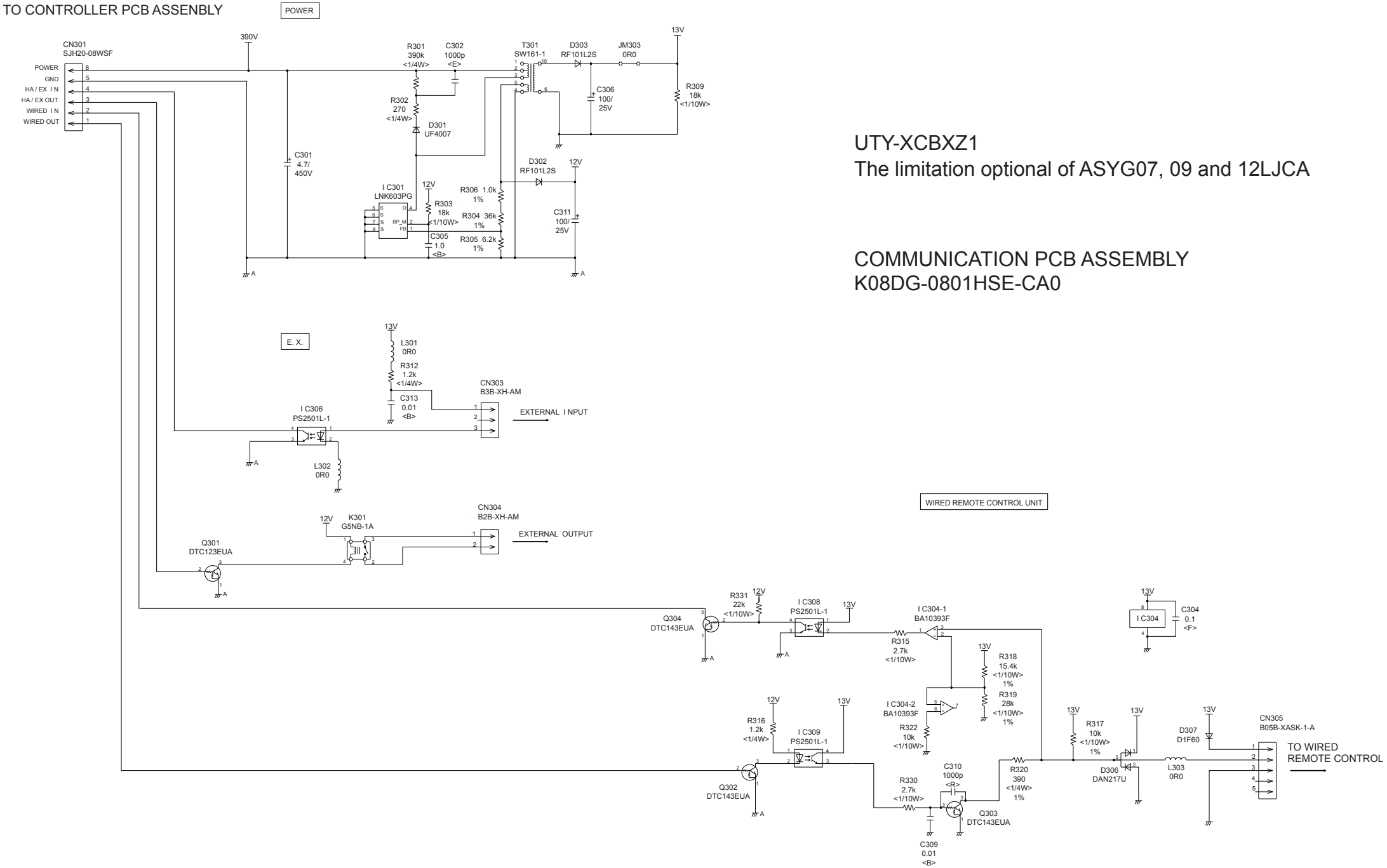

UTY-XCBXZ1
The limitation optional of ASYG07, 09 and 12LJCA

COMMUNICATION PCB ASSEMBLY
K08DG-0801HSE-CA0

INDOOR UNIT
WALL MOUNTED
CONTROL UNIT
ASYG18LFCA : EZ-010YHSE
ASYG24LFCA : EZ-01001HSE

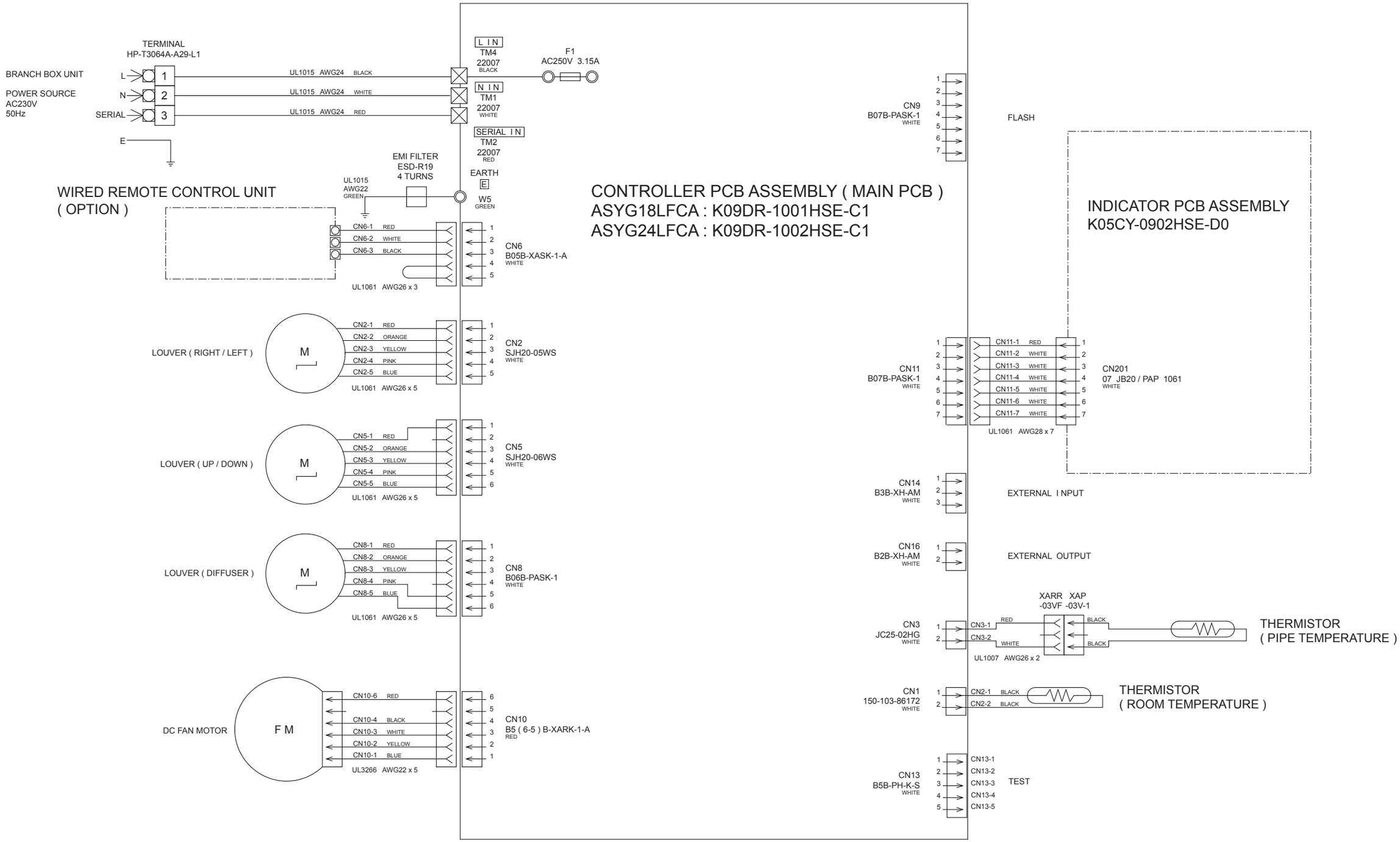

INDOOR UNIT
WALL MOUNTED
CONTROLLER PCB ASSEMBLY (MAIN PCB)
ASYG18LFCA : K09DR-1001HSE-C1
ASYG24LFCA : K09DR-1002HSE-C1

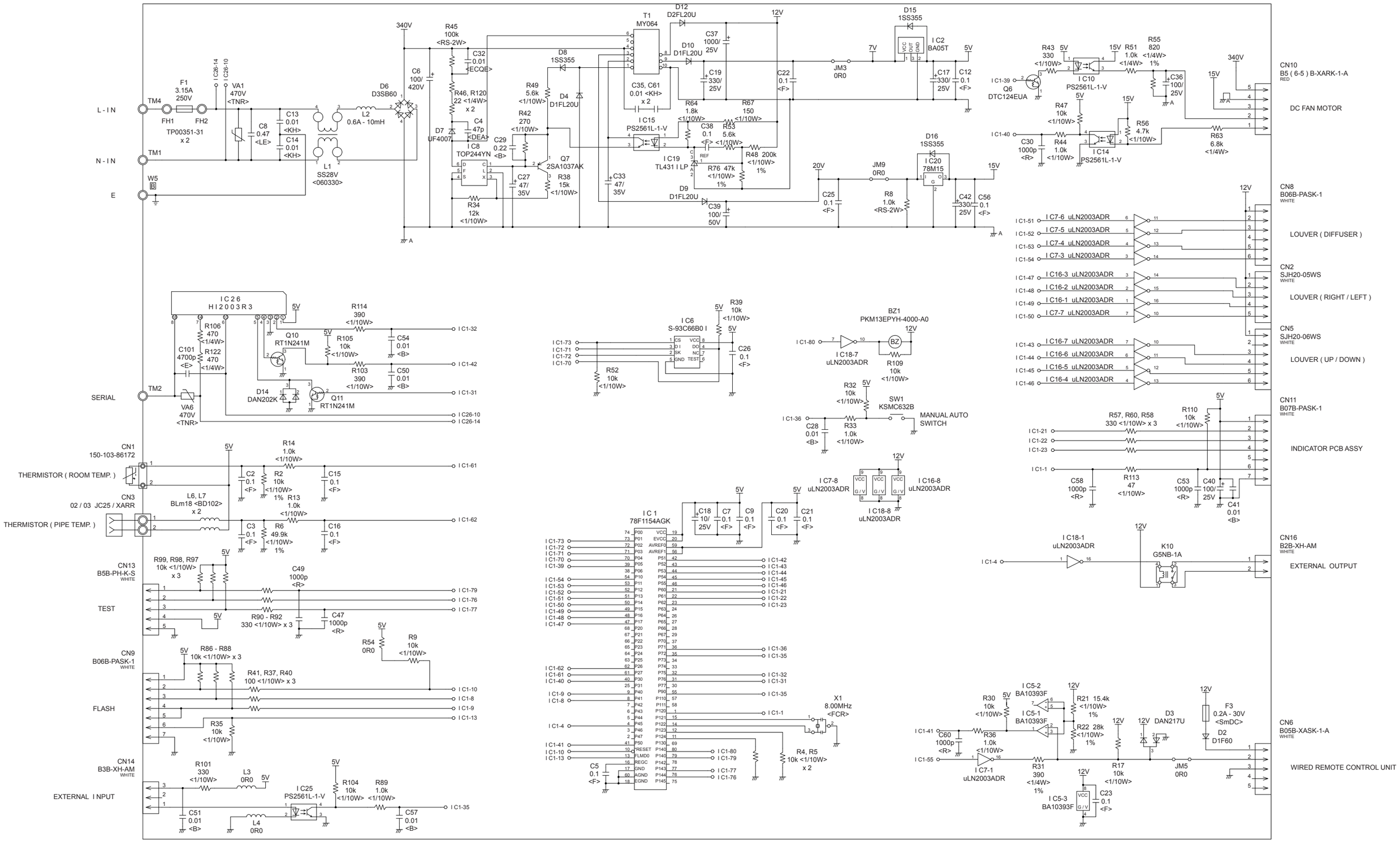

INDOOR UNIT
WALL MOUNTED
ASYG18LFCA
ASYG24LFCA

INDICATOR PCB ASSEMBLY
K05CY-0902HSE-D0

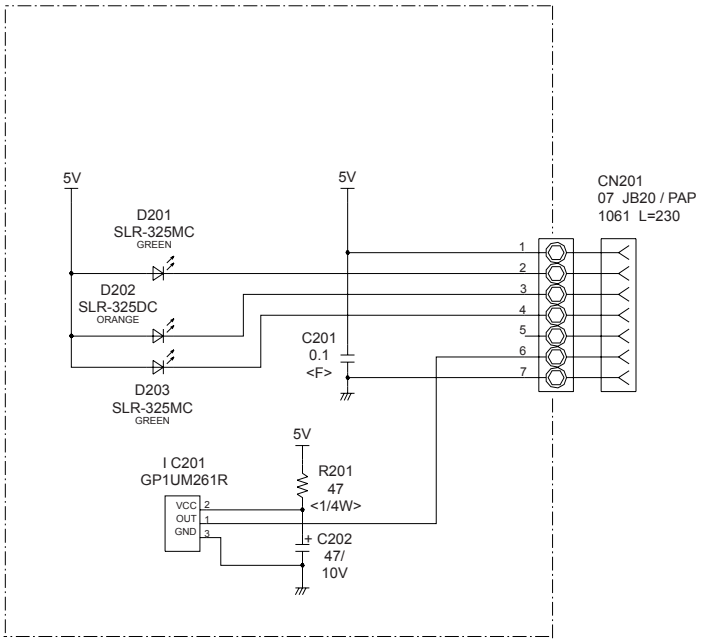

INDOOR UNIT
COMPACT CASSETTE
CONTROL UNIT
AUYG07LVLA : EZ-01004HSE
AUYG09LVLA : EZ-01005HSE
AUYG12LVLA : EZ-01006HSE
AUYG14LVLA : EZ-01007HSE
AUYG18LVLA : EZ-01008HSE

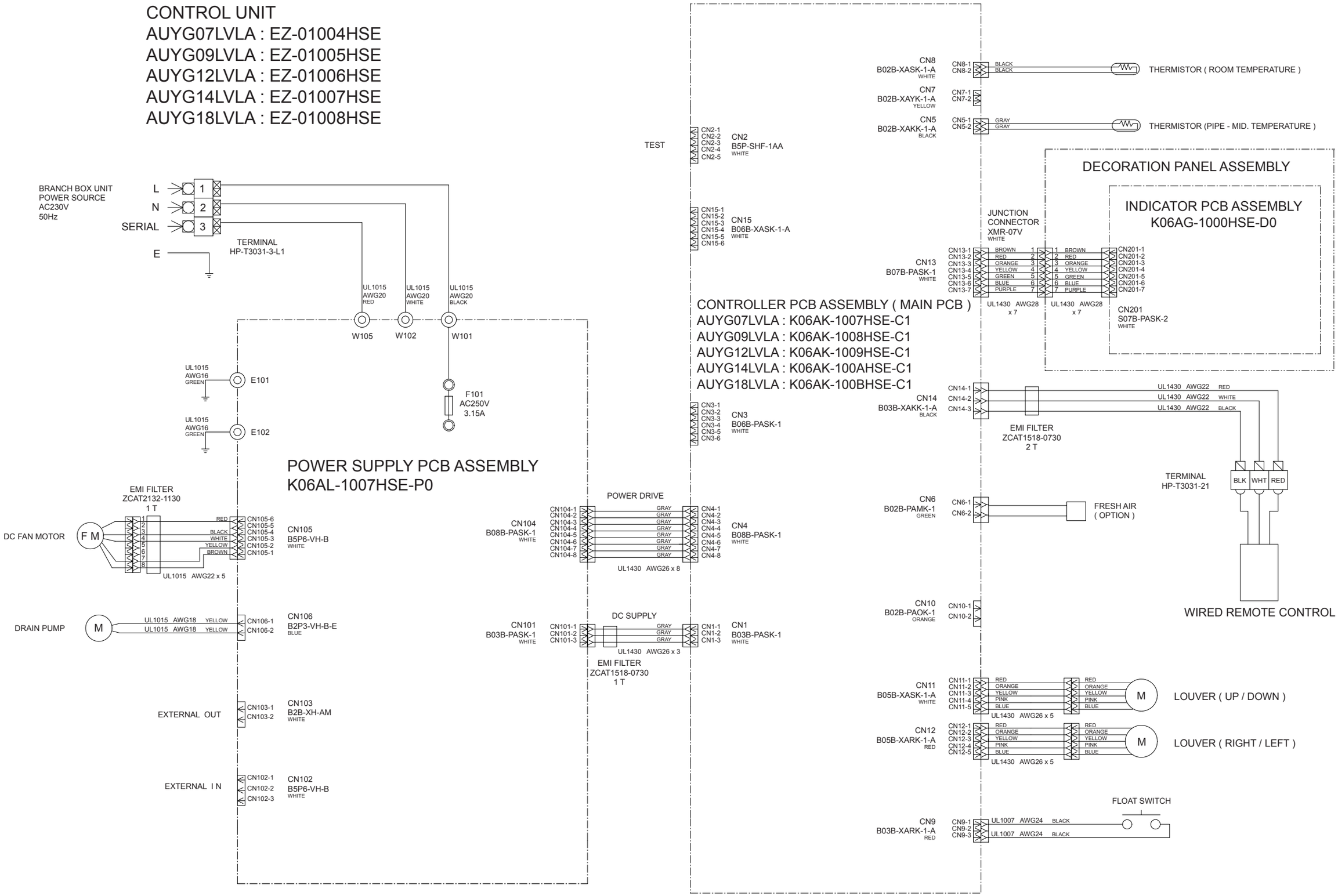

INDOOR UNIT
CONTROLLER PCB ASSEMBLY (MAIN PCB)

AUYG07LVLA : K06AK-1007HSE-C1 ARYG07LLTA : K06AK-100CHSE-C1 ABYG14LVTA : K06AK-100KHSE-C1
AUYG09LVLA : K06AK-1008HSE-C1 ARYG09LLTA : K06AK-100DHSE-C1 ABYG18LVTA : K06AK-100LHSE-C1
AUYG12LVLA : K06AK-1009HSE-C1 ARYG12LLTA : K06AK-100EHSE-C1
AUYG14LVLA : K06AK-100AHSE-C1 ARYG14LLTA : K06AK-100FHSE-C1
AUYG18LVLA : K06AK-100BHSE-C1 ARYG18LLTA : K06AK-100GHSE-C1

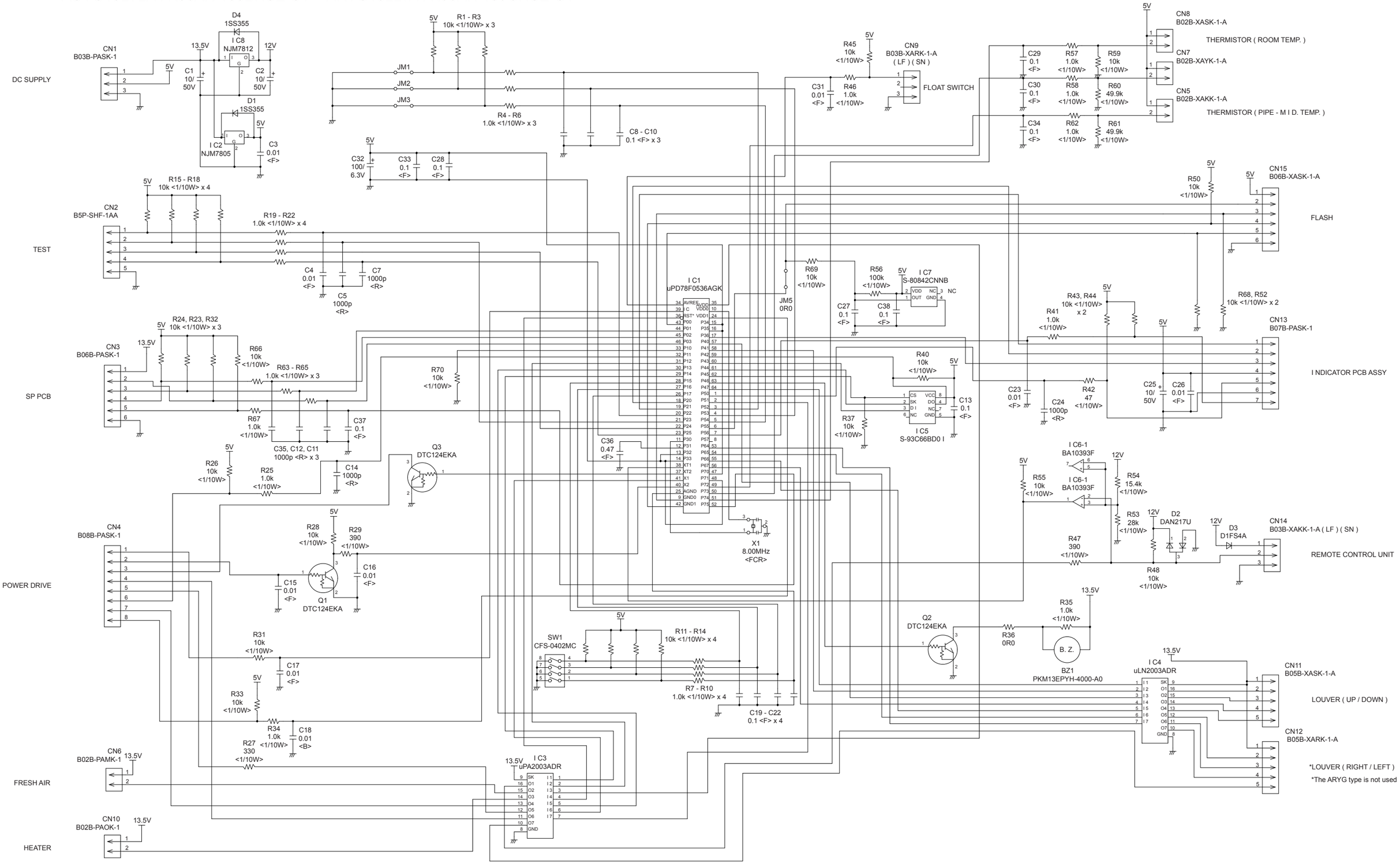

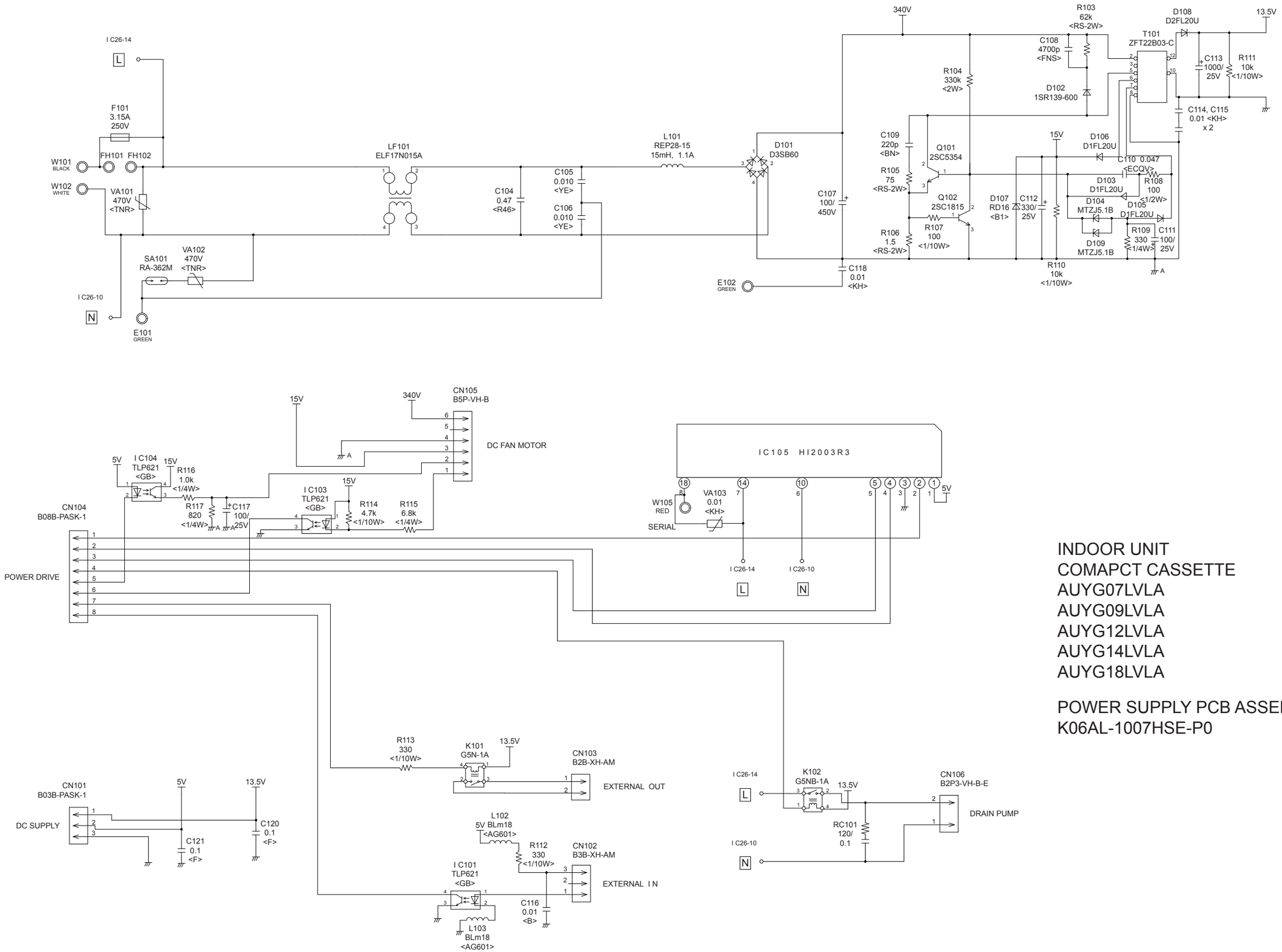

INDOOR UNIT
COMAPCT CASSETTE
AUYG07LVLA
AUYG09LVLA
AUYG12LVLA
AUYG14LVLA
AUYG18LVLA

POWER SUPPLY PCB ASSEMBLY
K06AL-1007HSE-P0

INDOOR UNIT
COMPACT CASSETTE
AUYG07LVLA
AUYG09LVLA
AUYG12LVLA
AUYG14LVLA
AUYG18LVLA

INDICATOR PCB ASSEMBLY (OPTION)
K06AG-1000HSE-D0

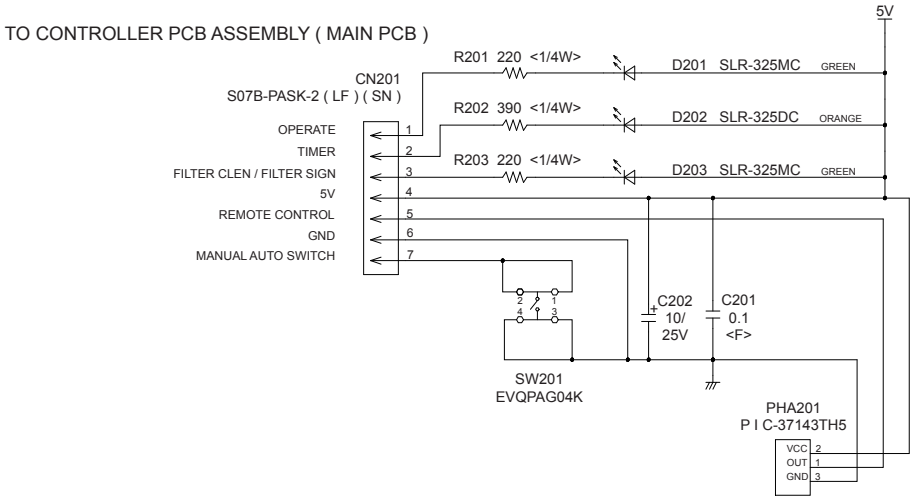

INDICATOR PCB ASSEMBLY (SWITCH + DISPLAY)
K06DD-0801HSE-F0

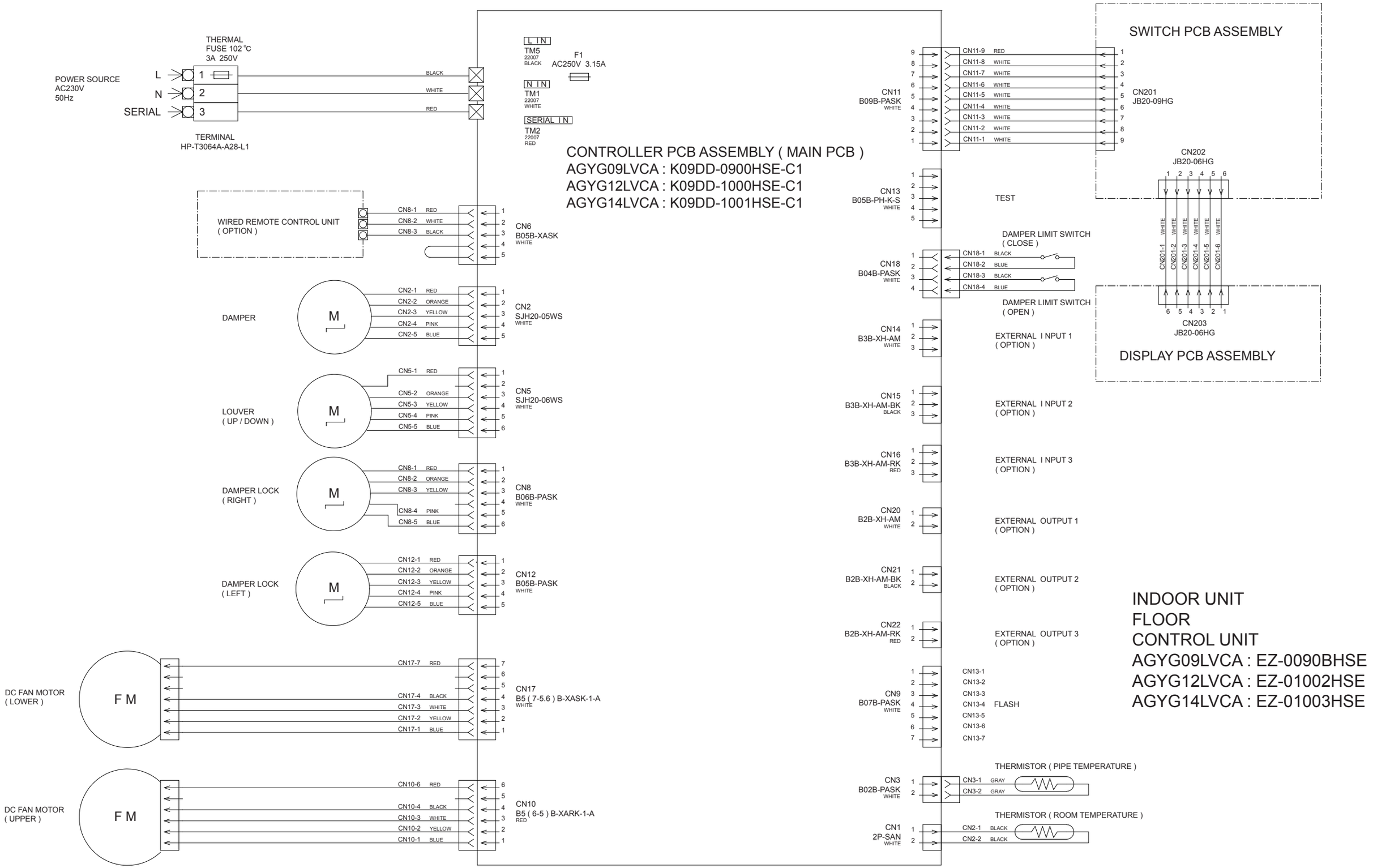

INDOOR UNIT
FLOOR
CONTROL UNIT
AGYG09LVCA : EZ-0090BHSE
AGYG12LVCA : EZ-01002HSE
AGYG14LVCA : EZ-01003HSE

INDOOR UNIT
FLOOR
CONTROLLER PCB ASSEMBLY (MAIN PCB)
AGYG09LVCA : K09DD-0900HSE-C1
AGYG12LVCA : K09DD-1000HSE-C1
AGYG14LVCA : K09DD-1001HSE-C1

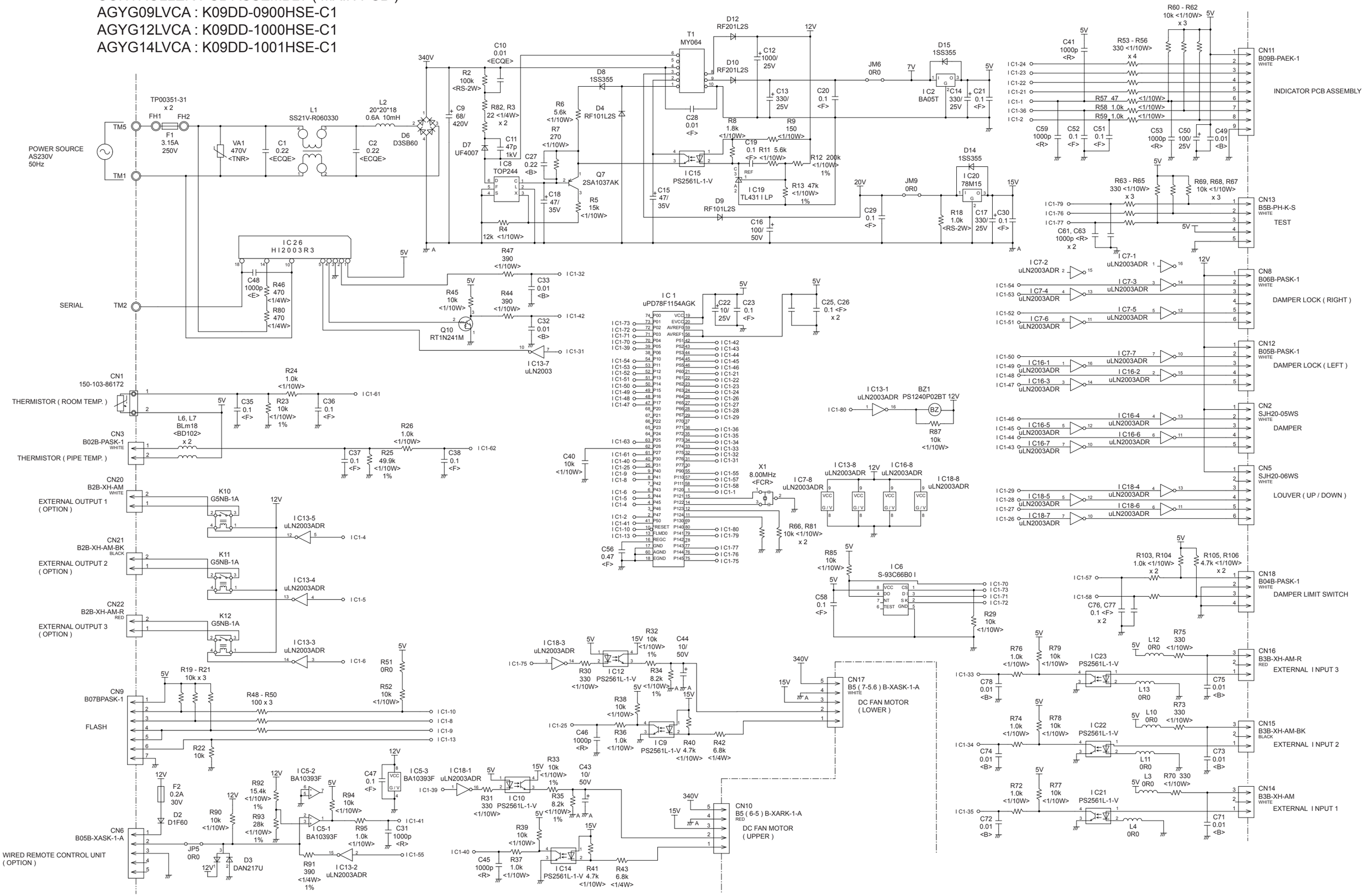

INDOOR UNIT
FLOOR
AGYG09LVCA
AGYG12LVCA
AGYG14LVCA

INDICATOR PCB ASSEMBLY
K06DD-0801HSE-F0

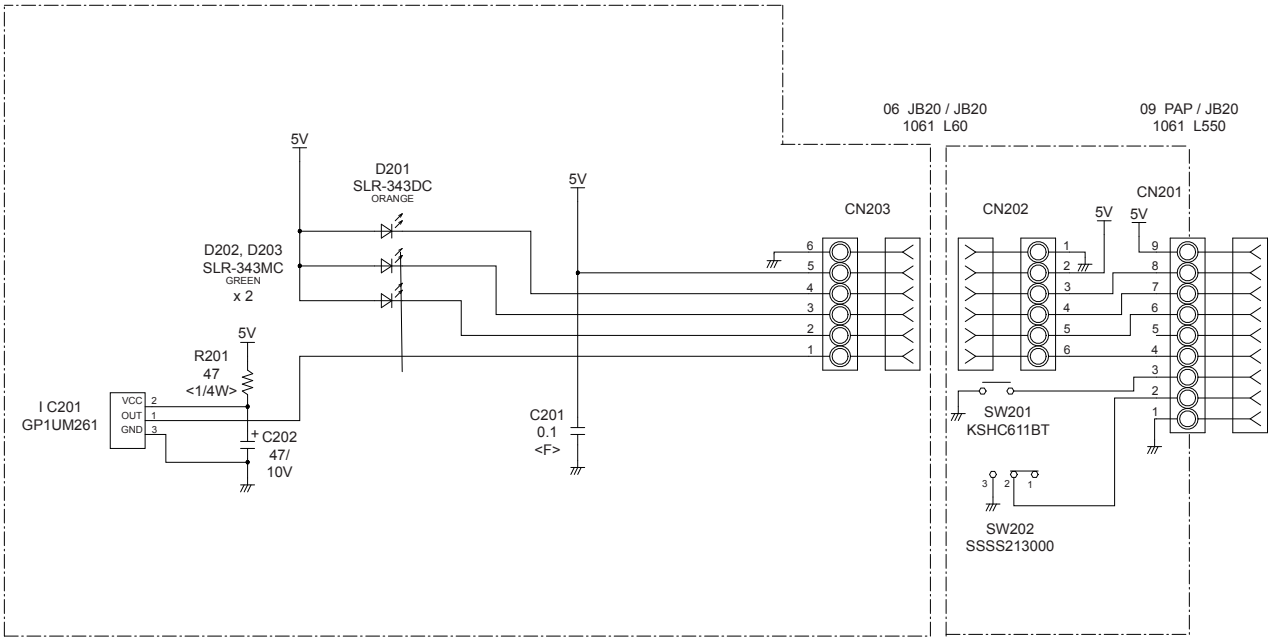

INDOOR UNIT
SLIM DUCT
CONTROL UNIT
ARYG07LLTA : EZ-01009HSE
ARYG09LLTA : EZ-0100AHSE
ARYG12LLTA : EZ-0100BHSE
ARYG14LLTA : EZ-0100CHSE
ARYG18LLTA : EZ-0100DHSE

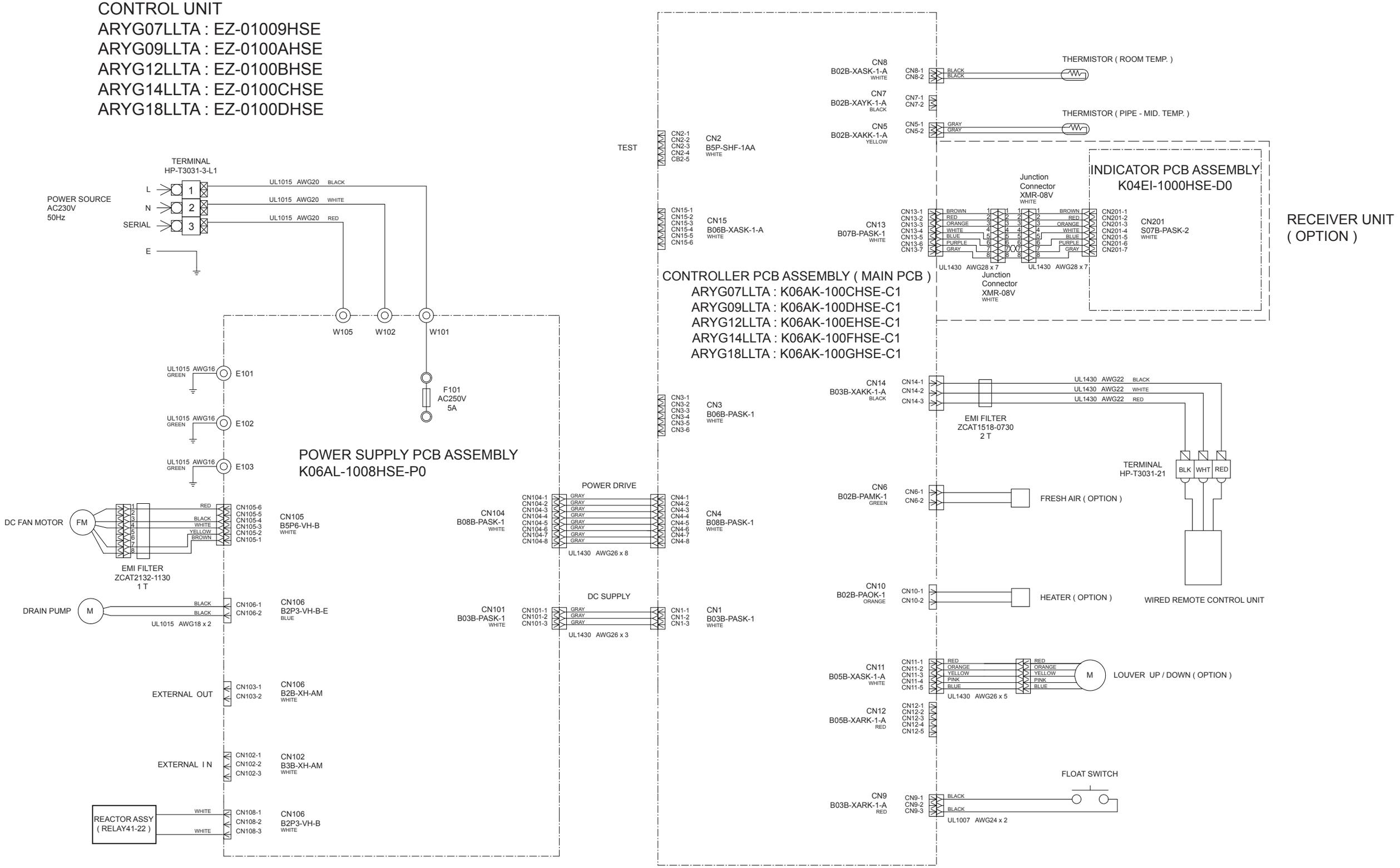

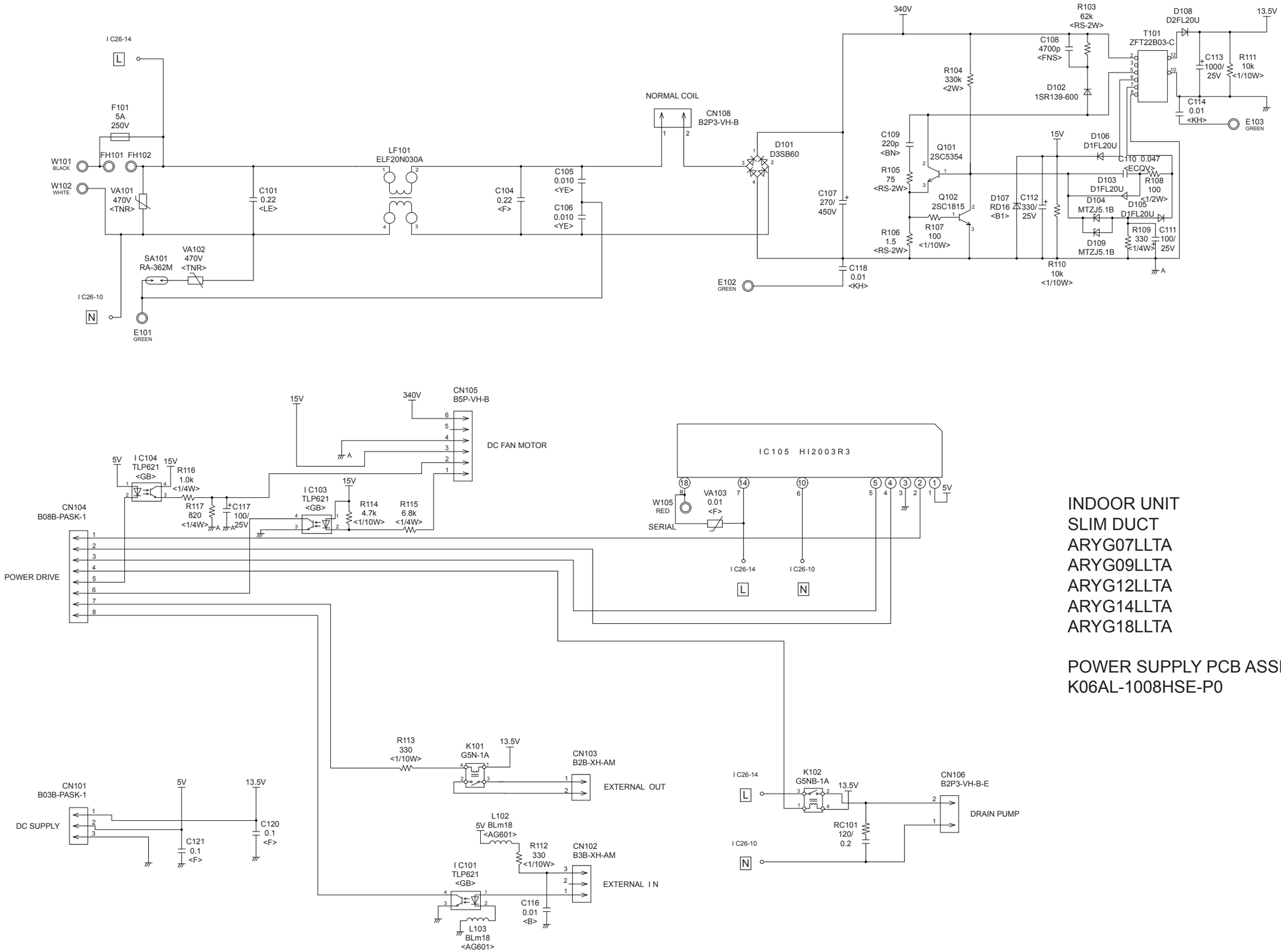

INDOOR UNIT
SLIM DUCT
ARYG07LLTA
ARYG09LLTA
ARYG12LLTA
ARYG14LLTA
ARYG18LLTA

POWER SUPPLY PCB ASSEMBLY
K06AL-1008HSE-P0

INDOOR UNIT
SLIM DUCT
ARYG07LLTA
ARYG09LLTA
ARYG12LLTA
ARYG14LLTA
ARYG18LLTA

INDICATOR PCB ASSEMBLY (OPTION)
K04EI-1000HSE-D0

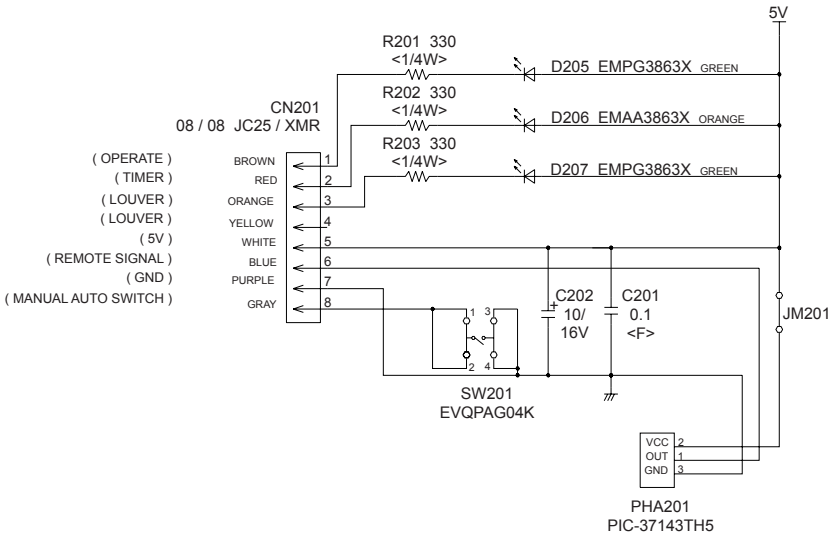

INDOOR UNIT
FLOOR / CEILING
CONTROL UNIT
ABYG14LVTA : EZ-0100FHSE
ABYG18LVTA : EZ-0100GHSE

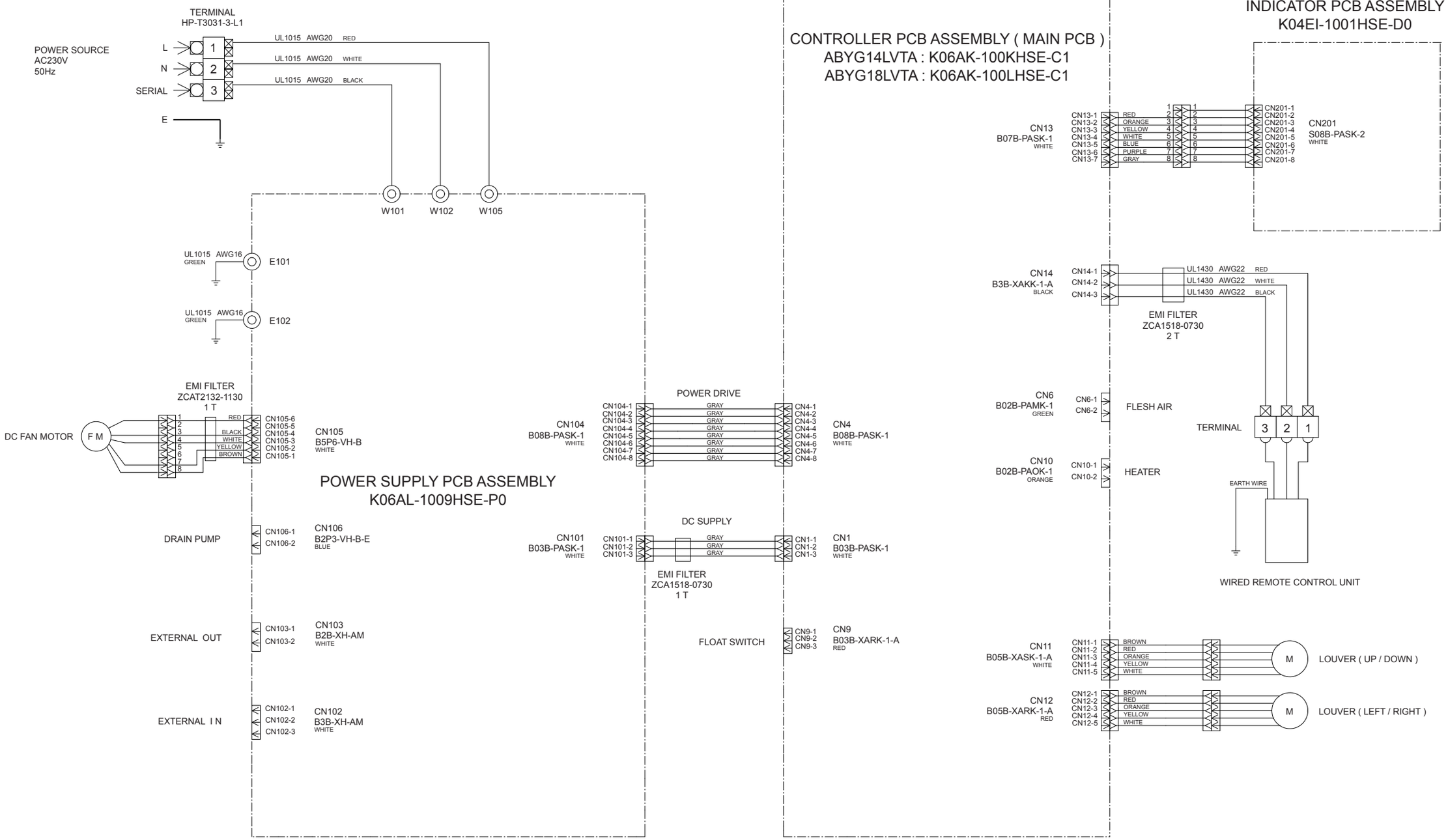

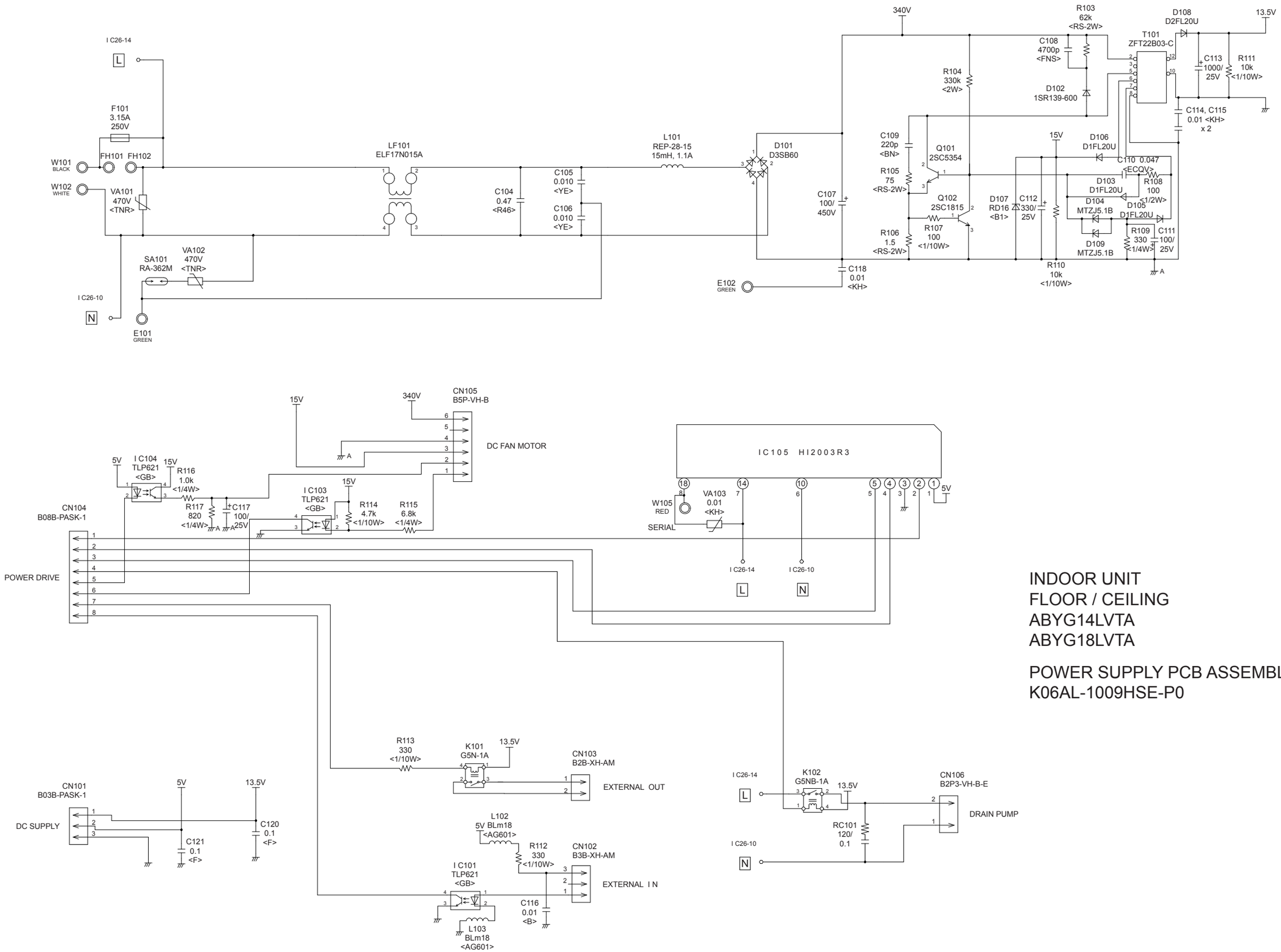

INDOOR UNIT
FLOOR / CEILING
ABYG14LVTA
ABYG18LVTA

POWER SUPPLY PCB ASSEMBLY
K06AL-1009HSE-P0

INDOOR UNIT
FLOOR / CEILING
ABYG14LVTA
ABYG18LVTA

INDICATOR PCB ASSEMBLY (OPTION)
K04EI-1001HSE-D0

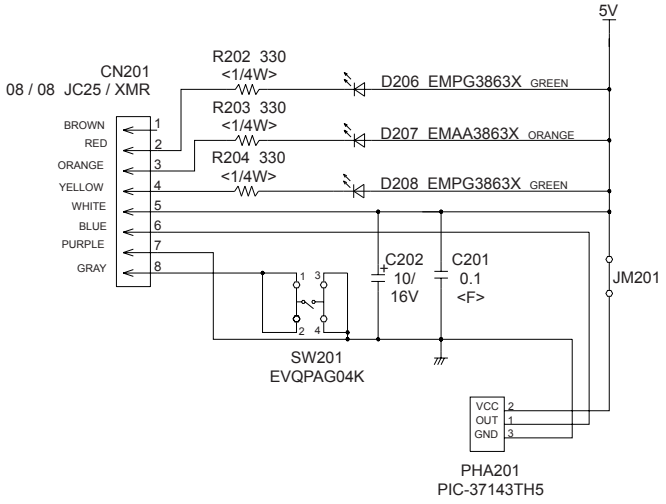

ERROR DETECTION

OUTDOOR UNIT

LED display

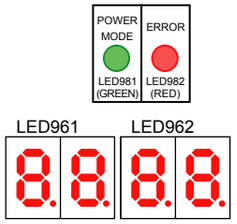

POWER MODE LED : on
ERROR LED : blink

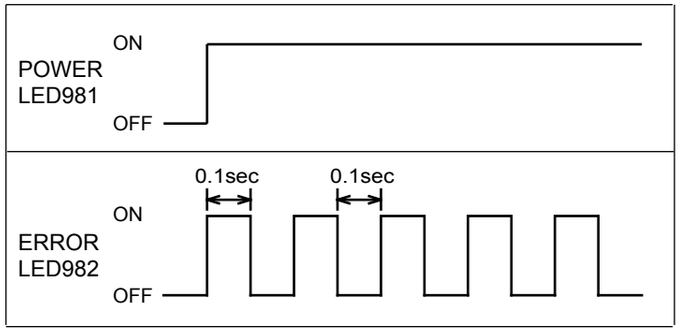

Operation button

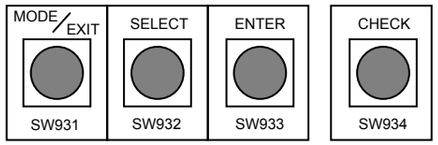

ERROR transition

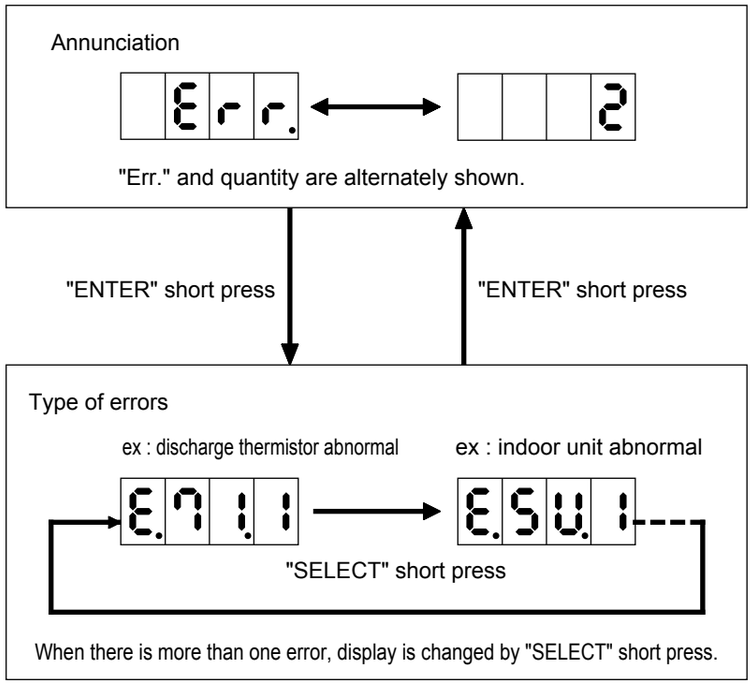

Short press : less than 3 seconds
Long press : more than 3 seconds

If some error newly occurs or is resolved during transition, it is reflected after going back to "Annunciation".

Error Code	Error Contents
E. 1 1. 3	Serial communication error
E. 1 1. 4	Serial communication error
E. 1 5. 6	Check run unfinished
E. 2 1. 2	Wiring mistake
E. 2 2. 1	Indoor unit capacity error
E. 2 4. 2	Connection unit number error (indoor unit)
E. 2 4. 3	Connection unit number error (branch unit)
E. 5 U. 1	Indoor unit error
E. 6 2. 1	Outdoor unit PCB model information error
E. 6 3. 1	Inverter error
E. 6 4. 1	Active filter error, PFC circuit error
E. 6 5. 3	Trip terminal L error
E. 6 A. 1	Display PCB communication error
E. 7 1. 1	Discharge thermistor error
E. 7 2. 1	Compressor thermistor error
E. 7 3. 3	Outdoor unit heat ex. liquid outlet thermistor error
E. 7 4. 1	Outdoor thermistor error
E. 7 5. 1	Suction gas thermistor error
E. 7 7. 1	Heat sink thermistor error
E. 8 2. 1	Sub cool heat ex. gas inlet thermistor error
E. 8 2. 2	Sub cool heat ex. gas outlet thermistor error
E. 8 3. 1	Liquid pipe thermistor error
E. 8 4. 1	Current sensor error
E. 8 6. 1	Discharge pressure sensor error
E. 8 6. 3	Suction pressure sensor error
E. 8 6. 4	High pressure switch error
E. 9 4. 1	Trip detection
E. 9 5. 1	Compressor rotor position detection error
E. 9 7. 3	Outdoor unit fan motor error
E. 9 9. 1	4-way valve error
E. A 1. 1	Discharge temperature error
E. A 3. 1	Compressor temperature error
E. A 5. 1	Low pressure error
E. J 2. U	Branch boxes error

BRANCH BOX
UTP-PY03A

When an error occurs, an error description displays in the LED (No.401 - 405).

●	Lit
◎(n)	Flashing (number of flashing)
○	Unlit

Green	Red				Comment
LED401	LED402	LED403	LED404	LED405	
●	●	●	●	●	Combination error
●	●	●	●	○	Power supply frequency error
●	●	●	○	●	
Branch box identifying display	◎(1)	○	○	○	EEPROM access error
	◎(2)	○	○	○	Model information error
	◎(3)	○	○	○	Serial communication error between Outdoor Unit and branch box
					Serial communication error between branch boxes
	◎(4)	○	○	○	Serial communication error between branch boxes
Primary unit : ◎(1)	◎(5)	●	○	○	Serial communication error between Indoor Unit A and branch box
		○	●	○	Serial communication error between Indoor Unit B and branch box
		○	○	●	Serial communication error between Indoor Unit C and branch box
Secondary unit1 : ◎(2)	◎(6)	●	○	○	Indoor Unit A, liquid pipe thermistor error (CN309)
		○	●	○	Indoor Unit B, liquid pipe thermistor error (CN309)
		○	○	●	Indoor Unit C, liquid pipe thermistor error (CN310)
Secondary unit2 : ◎(3)	◎(7)	●	○	○	Indoor Unit A, gas pipe thermistor error (CN309)
		○	●	○	Indoor Unit B, gas pipe thermistor error (CN309)
		○	○	●	Indoor Unit C, gas pipe thermistor error (CN310)
	◎(8)	●	○	○	Indoor Unit A, expansion valve full closure operation error (CN305)
		○	●	○	Indoor Unit B, expansion valve full closure operation error (CN306)
		○	○	●	Indoor Unit C, expansion valve full closure operation error (CN307)
	◎(9)	○	○	○	Remote control communication error

BRANCH BOX
UTP-PY02A

When an error occurs, an error description displays in the LED (No.401 - 405).

●	Lit
◎(n)	Flashing (number of flashing)
○	Unlit

Green	Red				Comment
LED401	LED402	LED403	LED404	LED405	
●	●	●	●	●	Combination error
●	●	●	●	○	Power supply frequency error
●	●	●	○	●	
Branch box identifying display	◎(1)	○	○	○	EEPROM access error
	◎(3)	○	○	○	Serial communication error between Outdoor Unit and branch box
					Serial communication error between branch boxes
	◎(4)	○	○	○	Serial communication error between branch boxes
Primary unit : ◎(1)	◎(5)	●	○	○	Serial communication error between Indoor Unit A and branch box
		○	●	○	Serial communication error between Indoor Unit B and branch box
Secondary unit1 : ◎(2)	◎(6)	●	○	○	Indoor Unit A, liquid pipe thermistor error (CN309)
		○	●	○	Indoor Unit B, liquid pipe thermistor error (CN309)
	◎(7)	●	○	○	Indoor Unit A, gas pipe thermistor error (CN309)
		○	●	○	Indoor Unit B, gas pipe thermistor error (CN309)
Secondary unit2 : ◎(3)	◎(8)	●	○	○	Indoor Unit A, expansion valve full closure operation error (CN305)
		○	●	○	Indoor Unit B, expansion valve full closure operation error (CN306)
	◎(9)	○	○	○	Remote control communication error

INDOOR UNIT

Error Contents	Operation LED	Timer LED	Economy LED
Serial Communication Error	1 times flash	1 times flash	Continuous flash
Wired Remote Controller Communication Error	1 times flash	2 times flash	Continuous flash
Check Run Unfinished	1 times flash	5 times flash	Continuous flash
Number of Wires and Pipes Error	2 times flash	1 times flash	Continuous flash
Indoor Unit Capacity Error	2 times flash	2 times flash	Continuous flash
Connected Combination Error	2 times flash	3 times flash	Continuous flash
Number of Indoor Units Error Number of Branch boxes Error	2 times flash	4 times flash	Continuous flash
Indoor Unit Model Information Error EEPROM Access Abnormal	3 times flash	2 times flash	Continuous flash
Manual Auto Switch Error	3 times flash	5 times flash	Continuous flash
Indoor Room Thermistor Error	4 times flash	1 times flash	Continuous flash
Indoor Heat Ex. Thermistor Error	4 times flash	2 times flash	Continuous flash
Indoor Unit Fan Motor Error	5 times flash	1 times flash	Continuous flash
Drainage Error	5 times flash	3 times flash	Continuous flash
Outdoor Unit Model Information Error	6 times flash	2 times flash	Continuous flash
Inverter Error	6 times flash	3 times flash	Continuous flash
A. F. Voltage Error	6 times flash	4 times flash	Continuous flash
I.P.M. Error	6 times flash	5 times flash	Continuous flash
Display P.C.B. Communication Error	6 times flash	10 times flash	Continuous flash
Discharge Thermistor Error	7 times flash	1 times flash	Continuous flash
Compressor Thermistor Error	7 times flash	2 times flash	Continuous flash
Heat Ex. Liquid Outlet Thermistor Error	7 times flash	3 times flash	Continuous flash
Outdoor Thermistor Error	7 times flash	4 times flash	Continuous flash
Suction Gas Thermistor Error	7 times flash	5 times flash	Continuous flash
Heat Sink Thermistor Error	7 times flash	7 times flash	Continuous flash

Error Contents	Operation LED	Timer LED	Economy LED
Sub-Cool Heat Ex.Gas Inlet Thermistor Error Sub-Cool Heat Ex.Gas Outlet Thermistor Error	8 times flash	2 times flash	Continuous flash
Liquid Pipe Thermistor Error	8 times flash	3 times flash	Continuous flash
Current Sensor Error	8 times flash	4 times flash	Continuous flash
Discharge Pressure Sensor Error Suction Pressure Sensor Error High Pressure Switch Error	8 times flash	6 times flash	Continuous flash
Over Current Error	9 times flash	4 times flash	Continuous flash
Compressor Control Error	9 times flash	5 times flash	Continuous flash
Outdoor Unit Fan Motor Error	9 times flash	7 times flash	Continuous flash
4 Way Valve Error	9 times flash	9 times flash	Continuous flash
Discharge Temp. Error	10 times flash	1 times flash	Continuous flash
Compressor Temp. Error	10 times flash	3 times flash	Continuous flash
Low Pressure Error	10 times flash	5 times flash	Continuous flash
Branch Boxes Error	13 times flash	2 times flash	Continuous flash

Flashing pattern example

Indoor unit main PCB error
(Operation LED : 3 times, Timer LED : 2 times)

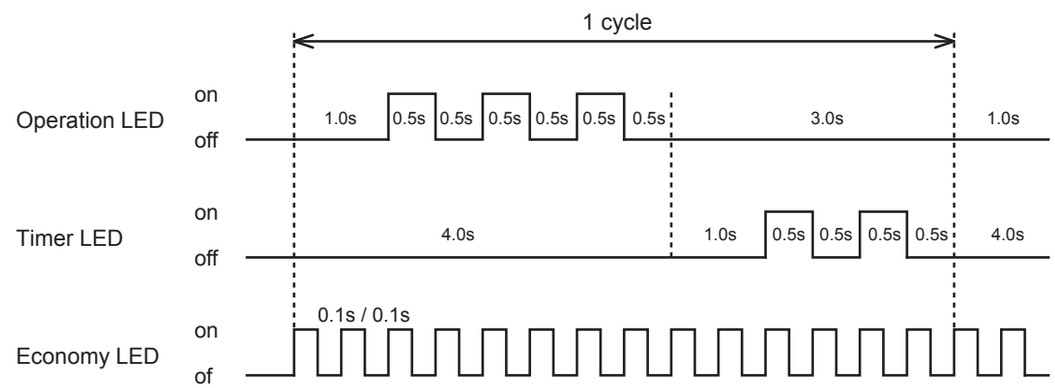

REMOTE CONTROL

SIMPLE REMOTE CONTROLLER

If an error occurs, the following display will be shown.
(“ Er“ will appear in the set room temperature display.)
If “ Er“ is displayed, immediately contact authorized service personnel.

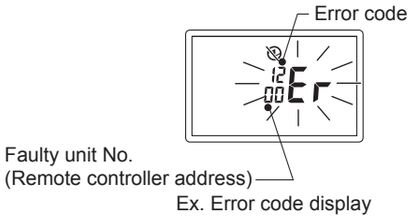

Ex. Error code display

WIRED REMOTE CONTROLLER

If an error occurs, the following display will be shown.
(“ Er“ will appear in the set room temperature display.)
If “ Er“ is displayed, immediately contact authorized service personnel.

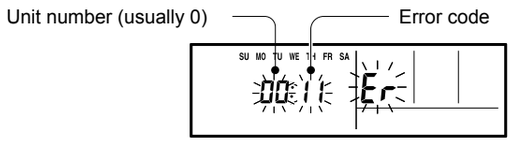

Ex. Error code display

CENTRAL REMOTE CONTROLLER

To show which indoor unit is the error displayed.
indoor unit's name and "ERROR" are alternately shown.
(0.5s indoor unit's name / 0.5s "ERROR")

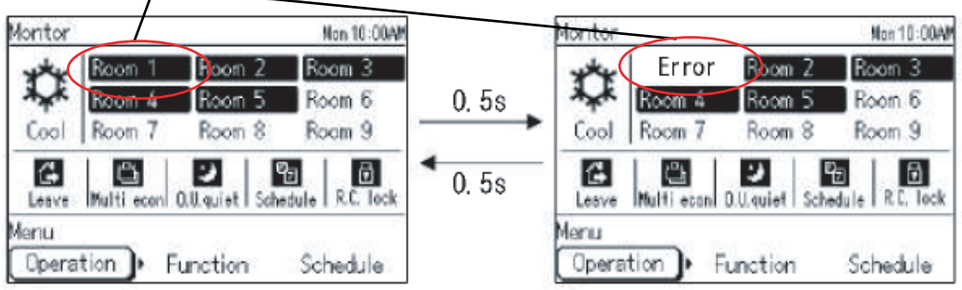

Ex. Error display

Error Code	Error Contents
1 1	Serial Communication Error
1 2	Wired Remote Controller Communication Error
1 5	Chech Run Unfinished
2 1	Number of Wires and Pipes Error
2 2	Indoor Unit Capacity Error
2 3	Connected Combination Error
2 4	Number of Indoor Units Error Number of Branch boxes Error
3 2	Indoor Unit Model Information Error EEPROM Access Abnormal
3 5	Manual Auto Switch Error
4 1	Indoor Room Thermistor Error
4 2	Indoor Heat Ex. Thermistor Error
5 1	Indoor Unit Fan Motor Error
5 3	Drainage Error
6 2	Outdoor Unit Model Information Error
6 3	Inverter Error
6 4	A. F. Voltage Error
6 5	I.P.M. Error
6 A	Display P.C.B. Communication Error
7 1	Discharge Thermistor Error
7 2	Compressor Thermistor Error
7 3	Heat Ex. Liquid Outlet Thermistor Error
7 4	Outdoor Thermistor Error
7 5	Suction Gas Thermistor Error
7 7	Heat Sink Thermistor Error

Error Code	Error Contents
8 2	Sub-Cool Heat Ex.Gas Inlet Thermistor Error Sub-Cool Heat Ex.Gas Outlet Thermistor Error
8 3	Liquid Pipe Thermistor Error
8 4	Current Sensor Error
8 6	Discharge Pressure Sensor Error Suction Pressure Sensor Error High Pressure Switch Error
9 4	Over Current Error
9 5	Compressor Control Error
9 7	Outdoor Unit Fan Motor Error
9 9	4 Way Valve Error
A 1	Discharge Temp. Error
A 3	Compressor Temp. Error
A 5	Low Pressure Error
J 2	Branch Boxes Error

PARTS

OUTDOOR UNIT
AOYG45LAT8

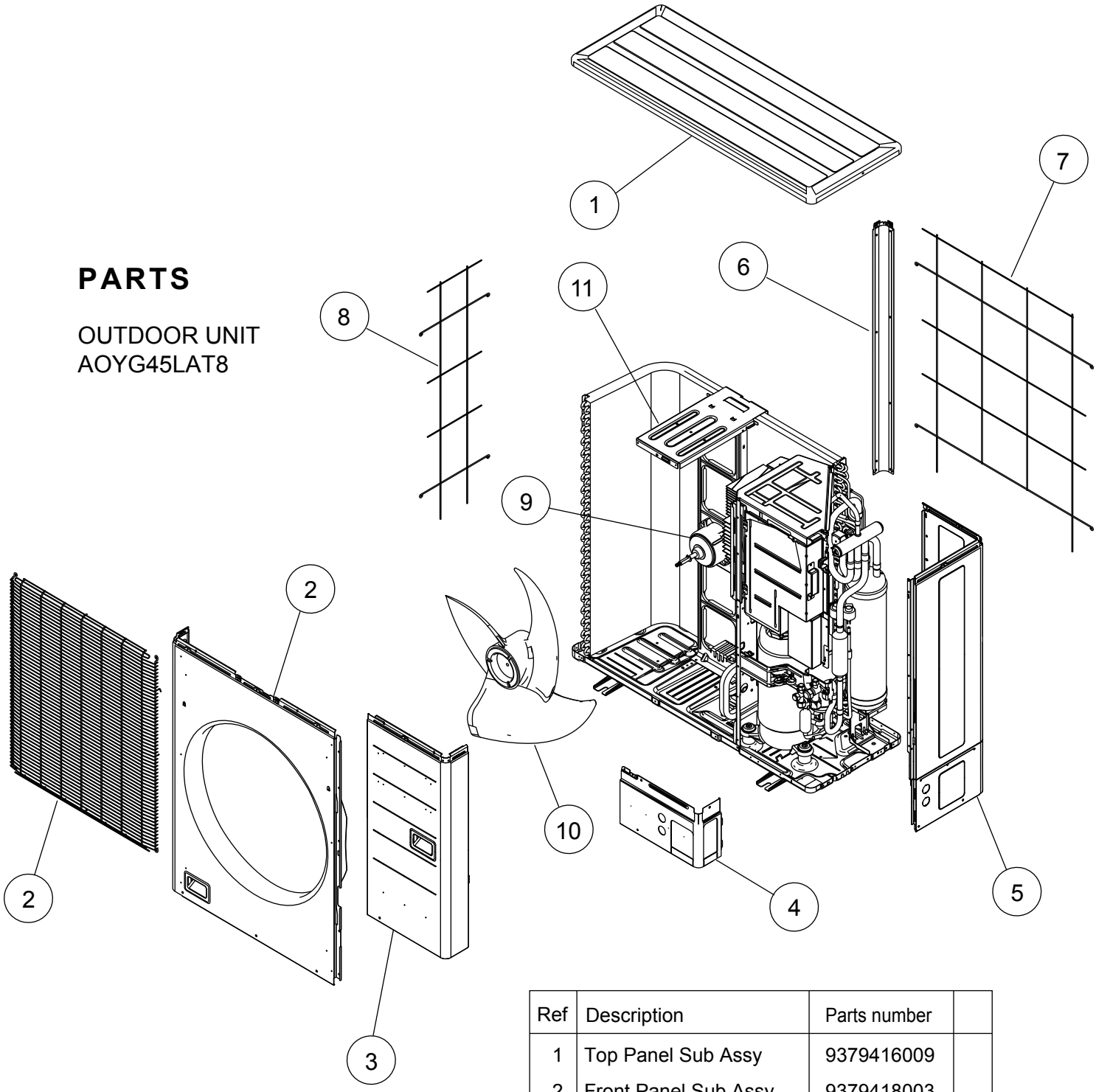

Ref	Description	Parts number	
1	Top Panel Sub Assy	9379416009	
2	Front Panel Sub Assy	9379418003	
3	Service Panel Sub Assy	9379424004	
4	Pipe Cover Front	9378861015	
5	Right Panel Sub Assy	9379420006	
6	Left Panel	9379431002	
7	Protective Net (Rear)	9379404006	
8	Protective Net (Left)	9379396004	
9	Motor DC Brushless	9603013011	
10	Propeller Fan	9379414005	
11	Motor Bracket Sub Assy	9379429009	
--	Rear Emblem	9380114000	

OUTDOOR UNIT
AOYG45LAT8

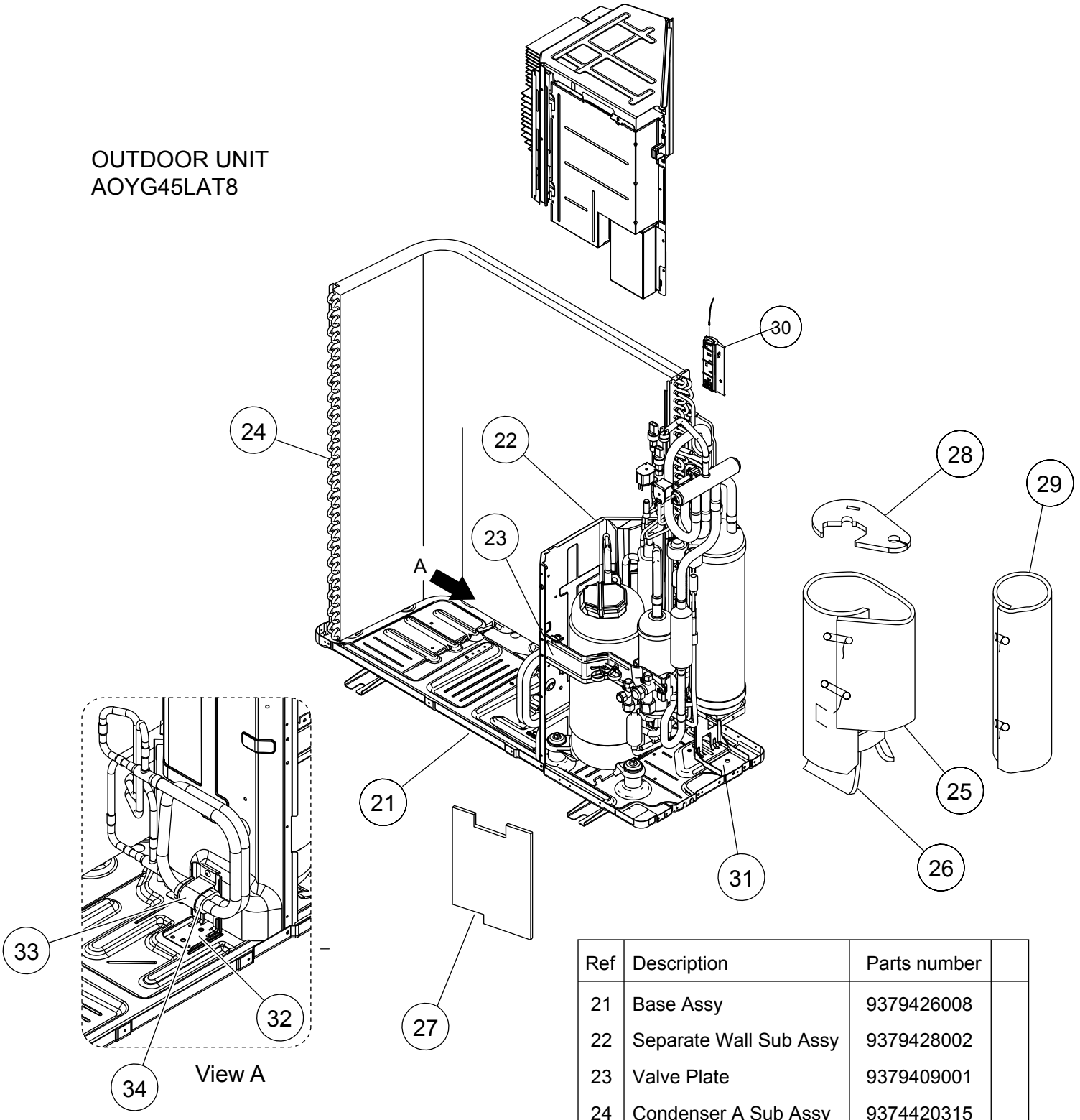

Ref	Description	Parts number	
21	Base Assy	9379426008	
22	Separate Wall Sub Assy	9379428002	
23	Valve Plate	9379409001	
24	Condenser A Sub Assy	9374420315	
25	Compressor Cover A	9378611054	
26	Compressor Cover B	9379974004	
27	Compressor Cover C	9380399001	
28	Compressor Cover Top	9379975001	
29	Accumulator Cover	9379977005	
30	Thermo Holder	9374177011	
31	Holder (Accumulator)	9379762007	
32	Holder (Sub Cool) A	9379674003	
33	Holder (Sub Cool) B	9379675000	
34	Rubber (Sub Cool)	9379676007	

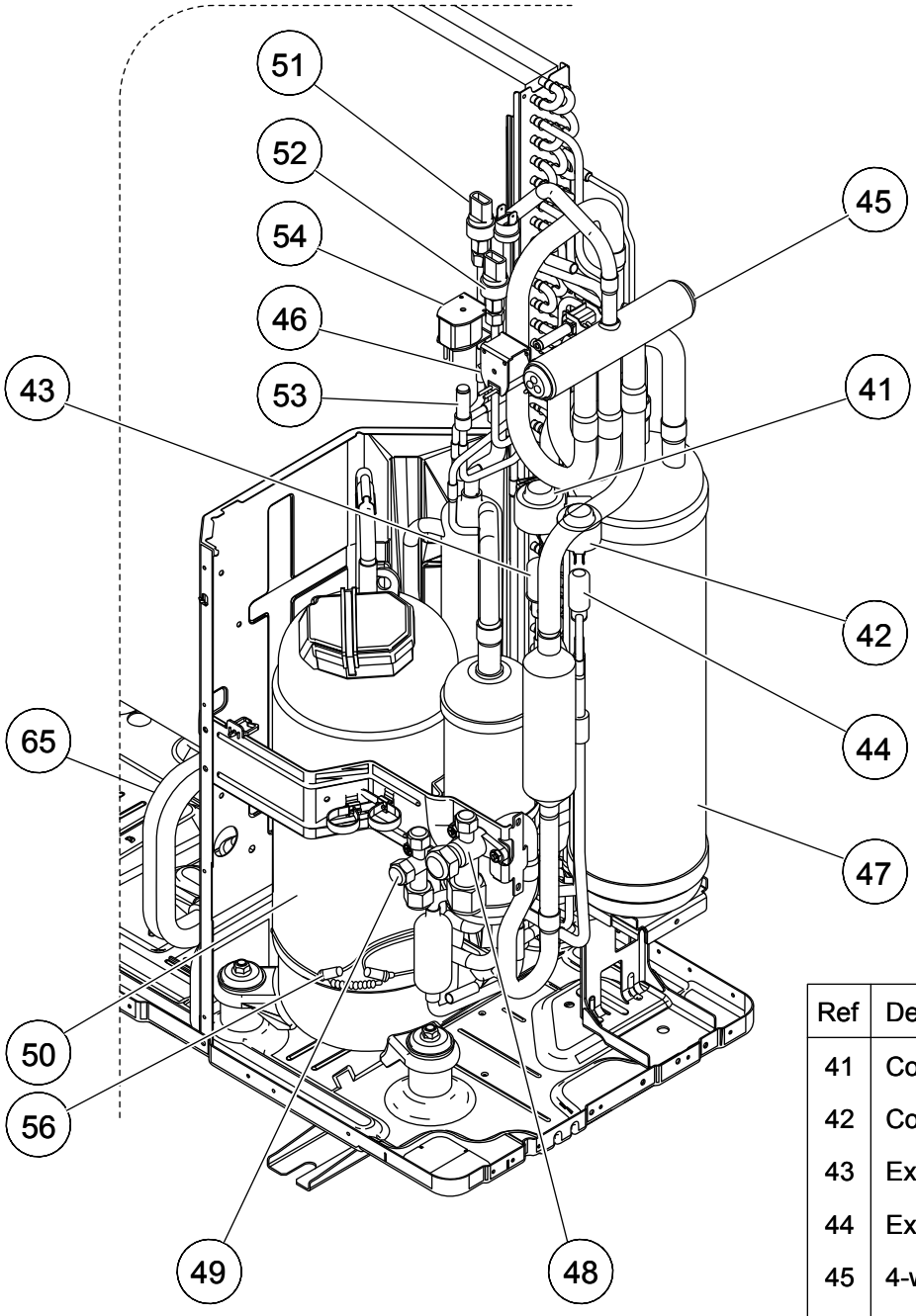

OUTDOOR UNIT
AOYG45LAT8

Ref	Description	Parts number	
41	Coil (Expansion Valve)	9970098031	
42	Coil (Expansion Valve)	9970096068	
43	Expansion Valve A Assy	9380060079	
44	Expansion Valve B Assy	9380060086	
45	4-way Valve Assy	9374425211	
46	Solenoid (4-way Valve)	9970055072	
47	Accumulator Sub Assy	9372700044	
48	3-way Valve A Assy	9380032007	
49	3-way Valve B Assy	9380031000	
50	Compressor Assy	9374423248	
51	Sensor (HP)	9900505059	
52	Sensor (LP)	9900505066	
53	Solenoid Valve Assy	9380016014	
54	Solenoid (Solenoid Valve)	9900189228	
55	Sub Cool HEx Sub Assy	9379051026	
56	Belt Heater	9361140301	

OUTDOOR UNIT

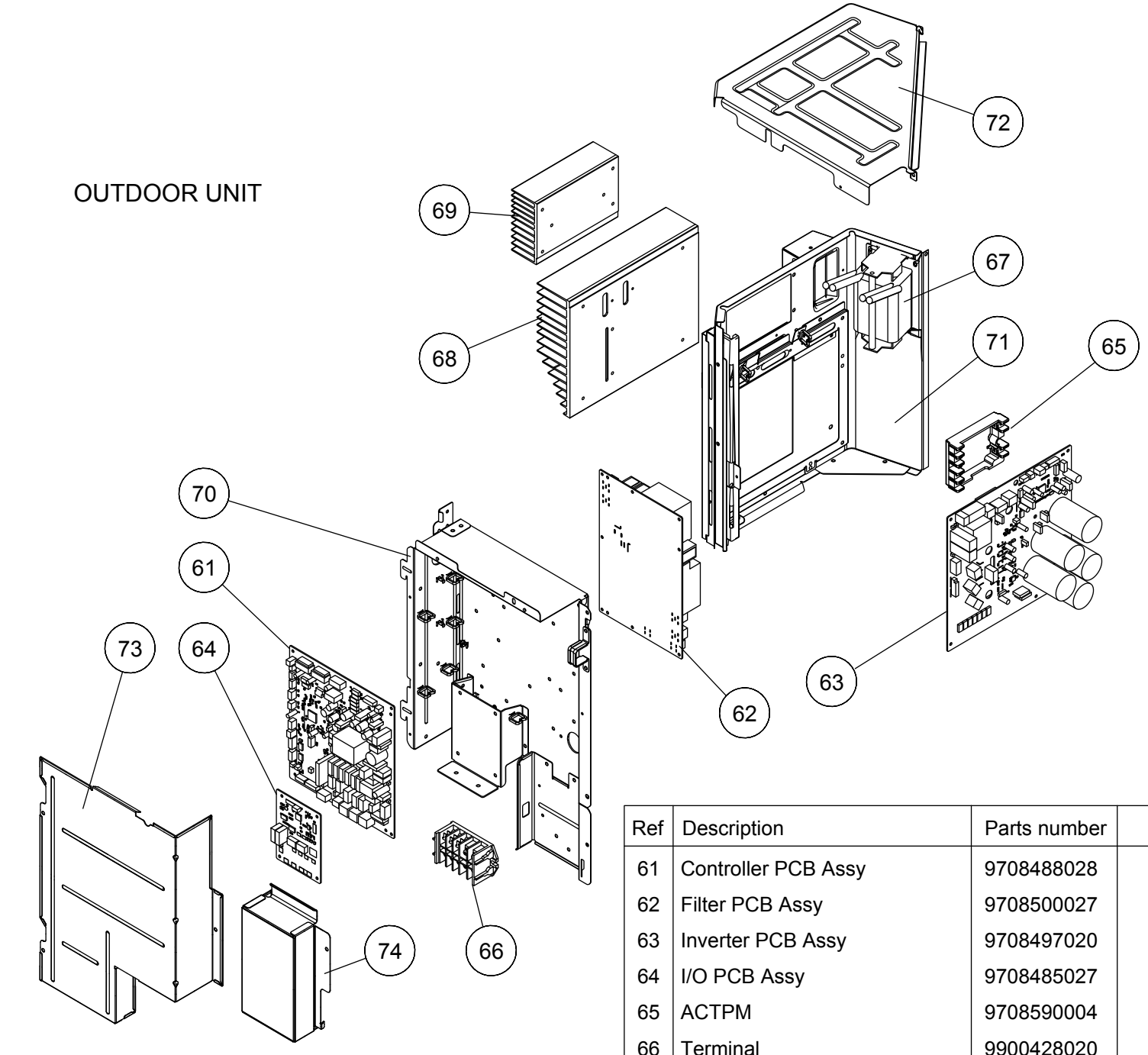

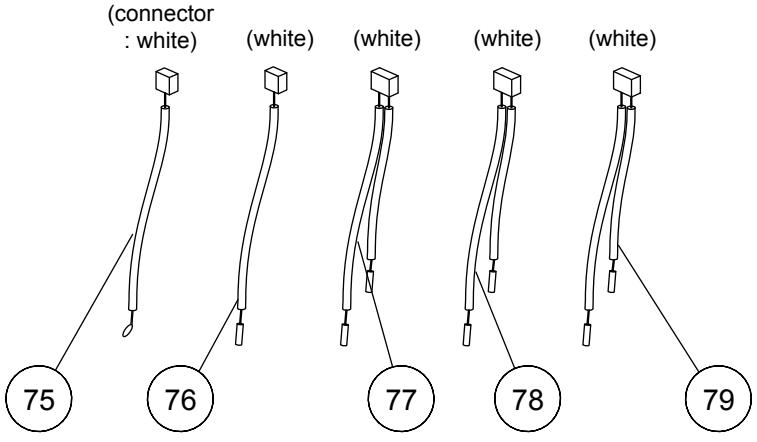

Ref	Description	Parts number	
61	Controller PCB Assy	9708488028	
62	Filter PCB Assy	9708500027	
63	Inverter PCB Assy	9708497020	
64	I/O PCB Assy	9708485027	
65	ACTPM	9708590004	
66	Terminal	9900428020	
67	Choke Coil	9900592011	
68	Heatsink A	9379787000	
69	Heatsink B	9379788007	
70	Case (Main) Assy	9380049012	
71	Case (Inv) Assy	9380050001	
72	Cover (Top)	9379774000	
73	Cover (Front) Assy	9380068006	
74	Cover (Terminal)	9379850001	
75	Thermistor (Outdoor)	9900210052	
76	Thermistor (Suction)	9900600006	
77	Thermistor Assy (Heat Ex & Subcool Lo (Out))	9900599003	
78	Thermistor Assy (Subcool Lo (In) & Hi (Out))	9900599010	
79	Thermistor Assy (Discharge & Comp. Temp.)	9900598006	

PARTS

BRANCH BOX
UTP-PY02A (2 branch)
UTP-PY03A (3 branch)

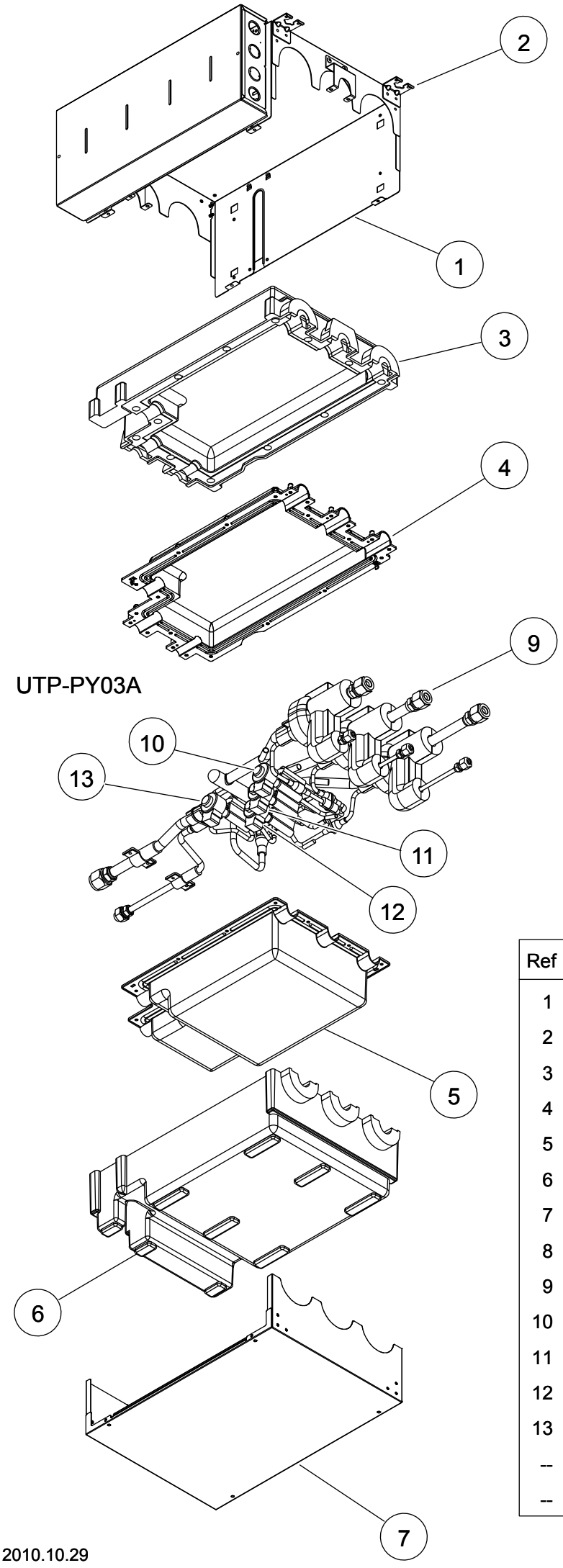

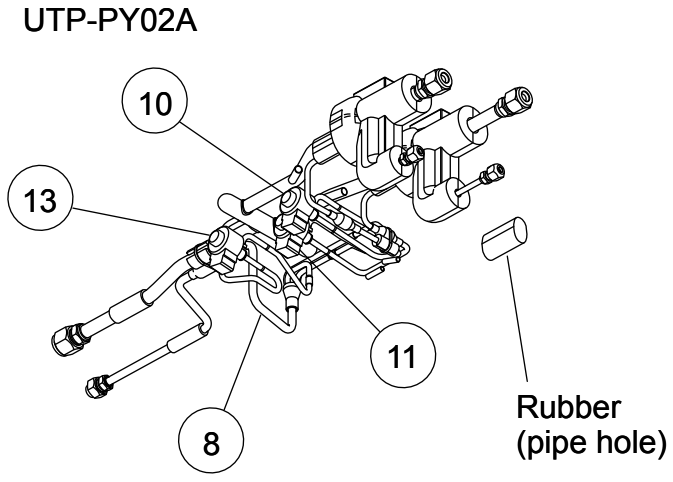

Ref	Description	Parts number	
1	Top Panel	9379775007	
2	Hook Metal	9379778008	
3	Insulation Box (Top) Sub Assy	9380102007	
4	Top Case Sub Assy	9380108009	
5	Bottom Case	9379789004	
6	Insulation Box (Bottom) Sub Assy	9380103004	
7	Bottom Panel	9379776004	
8	Pipe Unit (UTP-PY02A)	9380055037	
9	Pipe Unit (UTP-PY03A)	9380055020	
10	EEV Coil A (Red)	9970106019	
11	EEV Coil B (White)	9970106026	
12	EEV Coil C (Green) (UTP-PY03A only)	9970106033	
13	EEV Coil Bypass (Blue)	9970106040	
--	Thermistor Assy A B (Red & White)	9900596002	
--	Thermistor Assy C (Green) (03 only)	9900597009	

BRANCH BOX
UTP-PY02A
(2 branch)

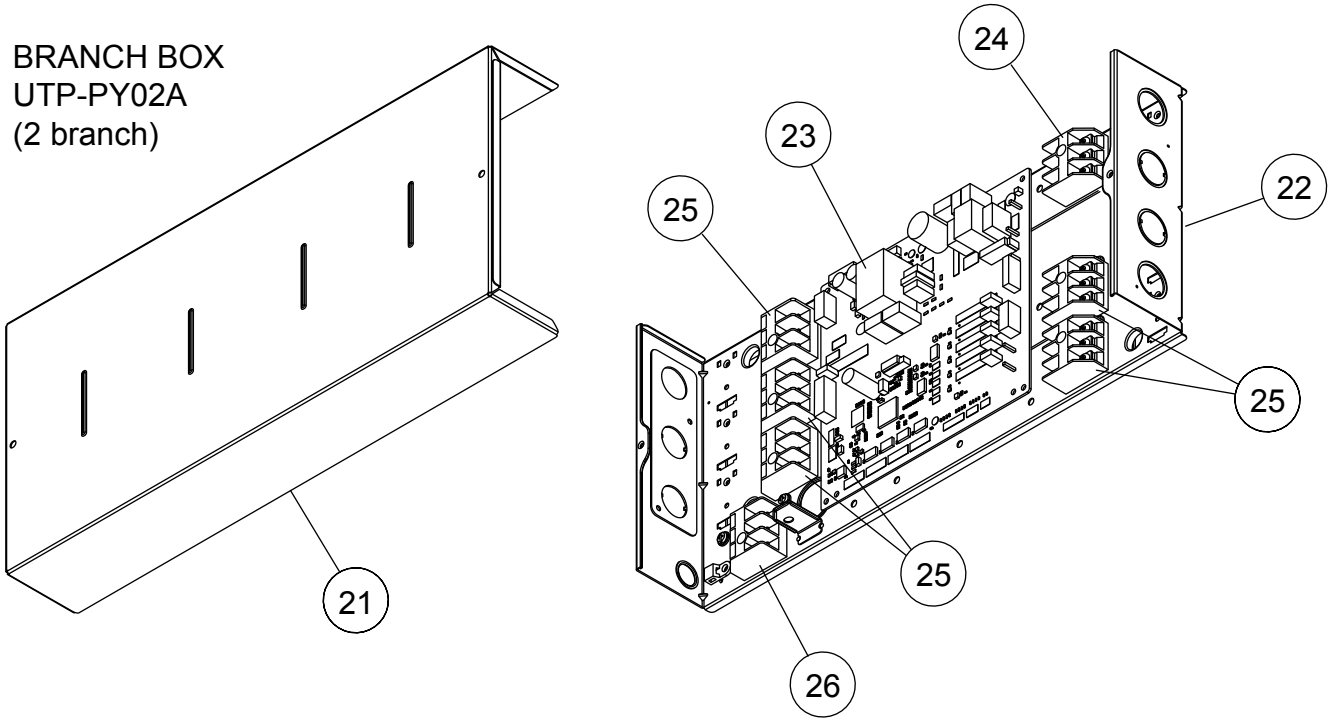

UTP-PY03A
(3 branch)

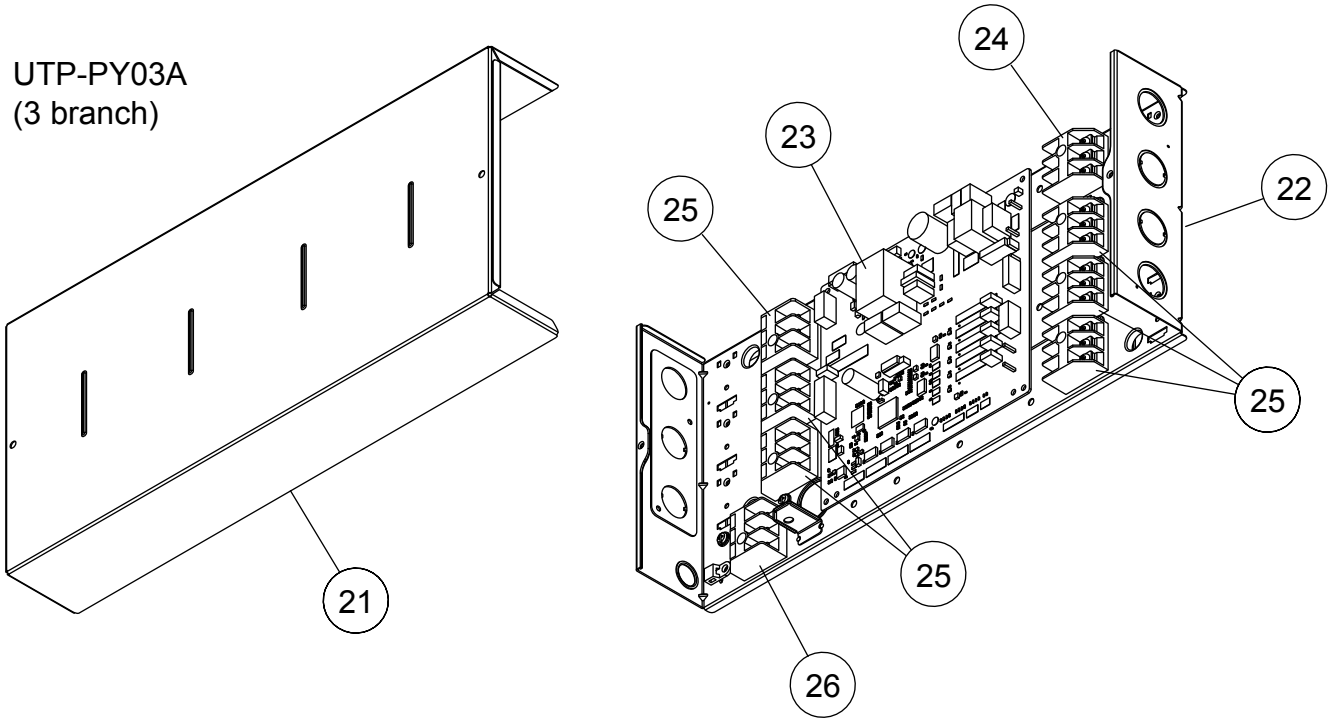

Ref	Description	Parts number	
21	Control Box Cover	9379781008	
22	Control Box Assy	9380053002	
23	Controller PCB Assy	9708741017	
24	Terminal (Power)	9306489199	
25	Terminal (Inner)	9306489182	
26	Terminal (Remote)	9900567002	

SEPARATION TUBE
UTP-SX248A

Branch Pipe A Sub Assy : 9371627069

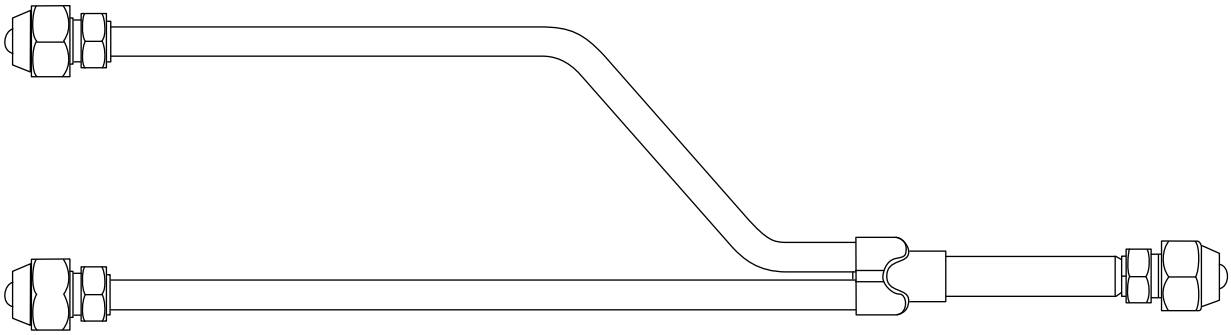

Branch Pipe B Sub Assy : 9373161288

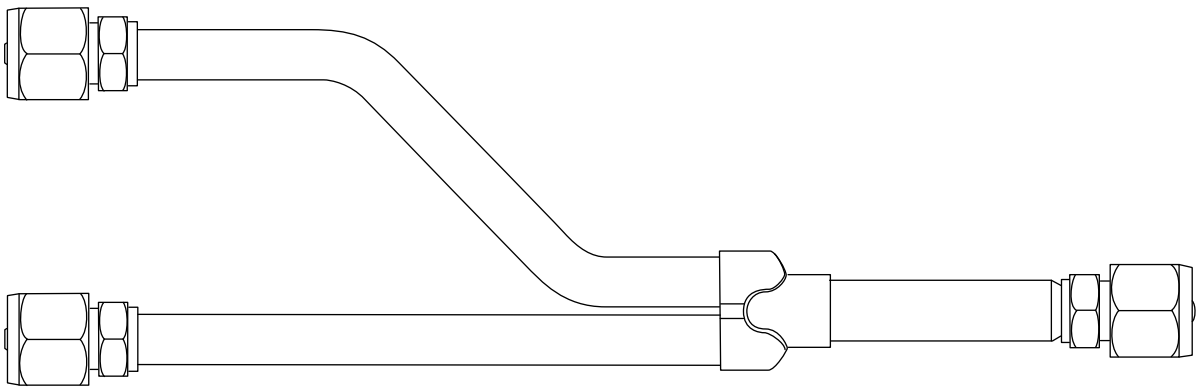

PARTS

INDOOR UNIT
COMPACT WALL MOUNTED
ASYG07LJCA
ASYG09LJCA
ASYG12LJCA

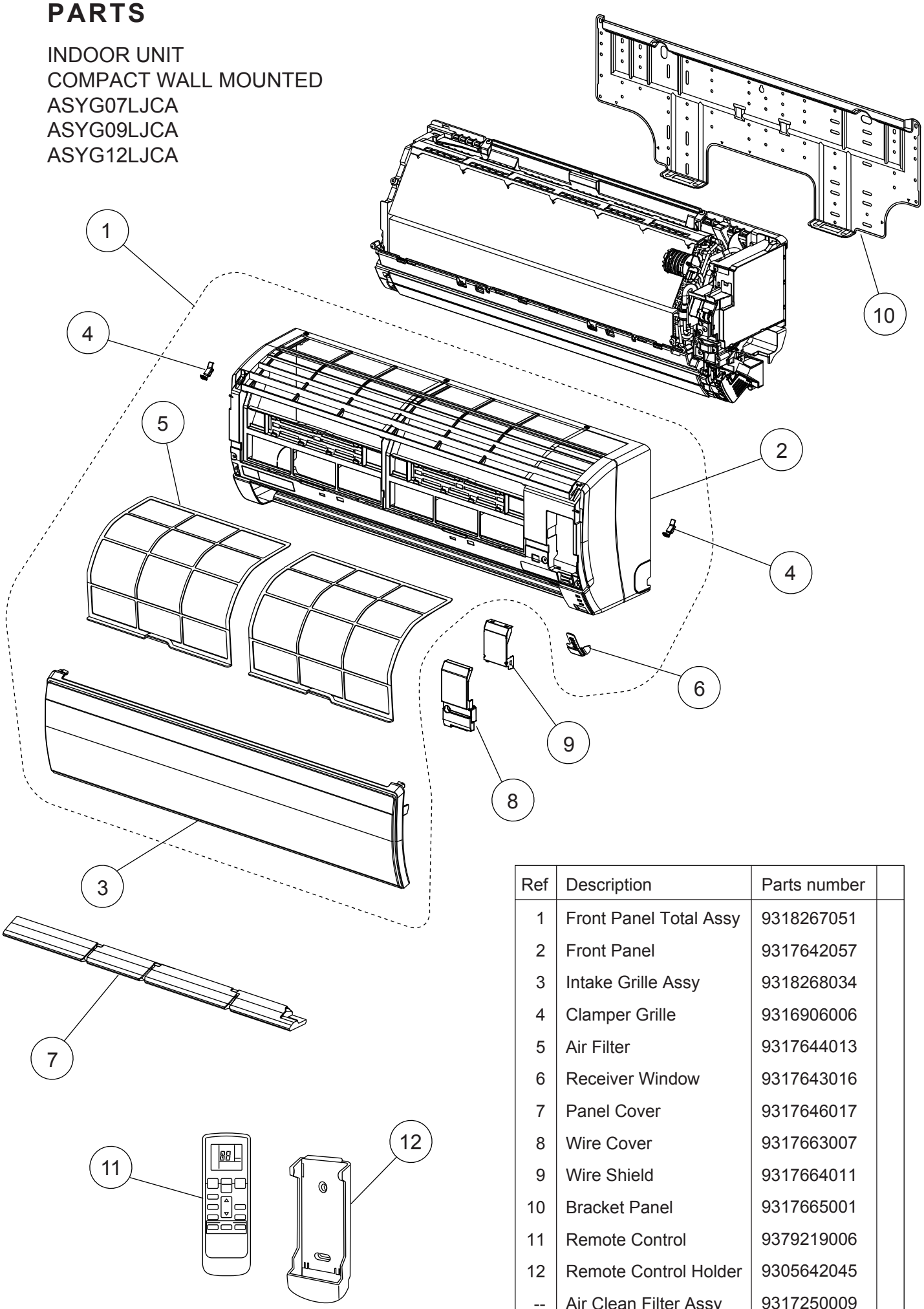

Ref	Description	Parts number	
1	Front Panel Total Assy	9318267051	
2	Front Panel	9317642057	
3	Intake Grille Assy	9318268034	
4	Clamper Grille	9316906006	
5	Air Filter	9317644013	
6	Receiver Window	9317643016	
7	Panel Cover	9317646017	
8	Wire Cover	9317663007	
9	Wire Shield	9317664011	
10	Bracket Panel	9317665001	
11	Remote Control	9379219006	
12	Remote Control Holder	9305642045	
--	Air Clean Filter Assy	9317250009	

INDOOR UNIT
COMPACT WALL MOUNTED
ASYG07LJCA
ASYG09LJCA
ASYG12LJCA

Ref	Description	Parts number	
21	Evaporator Total Assy	9317820011	
22	Joint Pipe Assy	9317838009	
23	Filter Guide	9317652001	
24	Rear Bracket	9317651004	
25	Evaporator Holder R	9317650007	
26	Evaporator Holder L	9317649001	
27	Holder (Room Thermistor)	9316895003	
28	Thermistor Assy	9900563004	

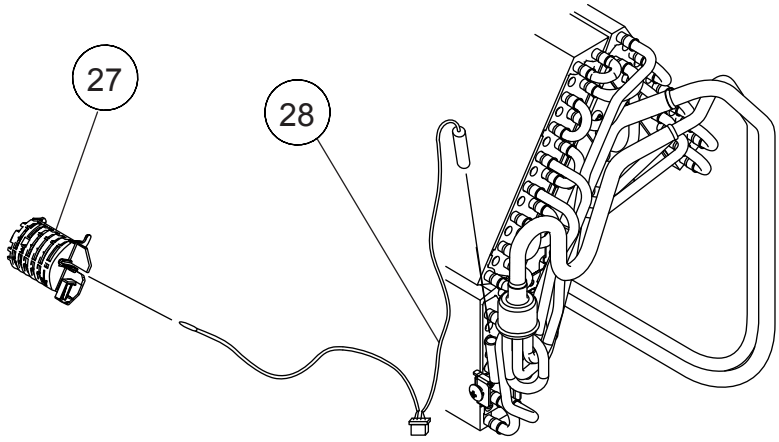

INDOOR UNIT
COMPACT WALL MOUNTED
ASYG07LJCA
ASYG09LJCA
ASYG12LJCA

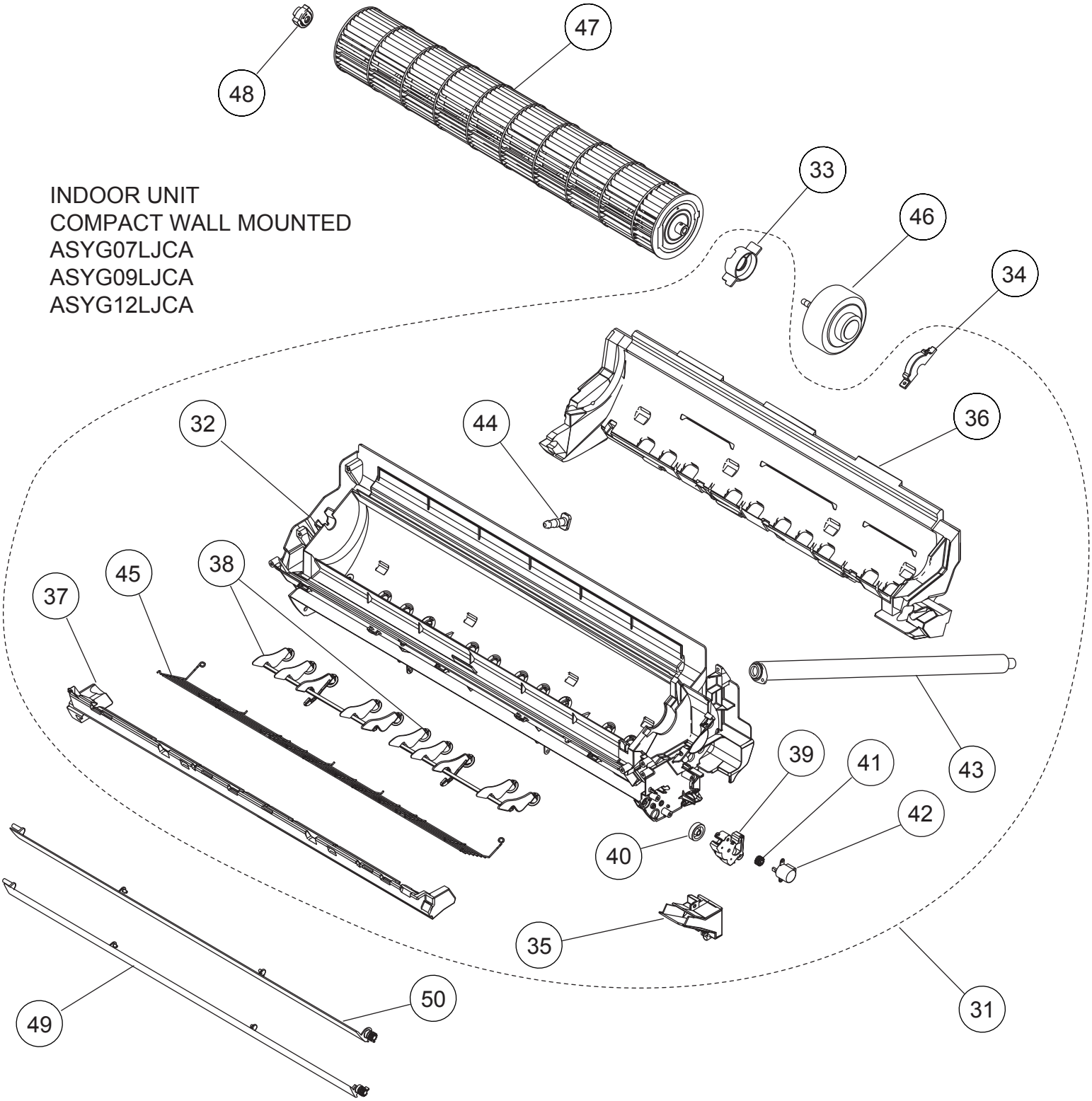

Ref	Description	Parts number	
31	Casing Assy	9318264050	
32	Casing	9317647014	
33	Motor Cover	9316568006	
34	Motor Cover	9316601000	
35	Cable Guide	9316567009	
36	Casing Cover B	9317653015	
37	Casing Cover F	9317654005	
38	R AND L Louver B	9316961012	
39	Louver Gear Holder	9317669016	
40	Louver Gear	9317648004	

Ref	Description	Parts number	
41	Gear A	9309994003	
42	Motor Step	9900384128	
43	Drain Hose Assy	9316904002	
44	Drain Cap	9316177017	
45	Fan Guard	9332277005	
46	Fan Motor	9602704002	
47	Crossflow Fan Assy	9316830004	
48	Bearing C Assy	9306628017	
49	Louver U	9317656016	
50	Louver Z	9317657006	

INDOOR UNIT
COMPACT WALL MOUNTED
ASYG07LJCA
ASYG09LJCA
ASYG12LJCA

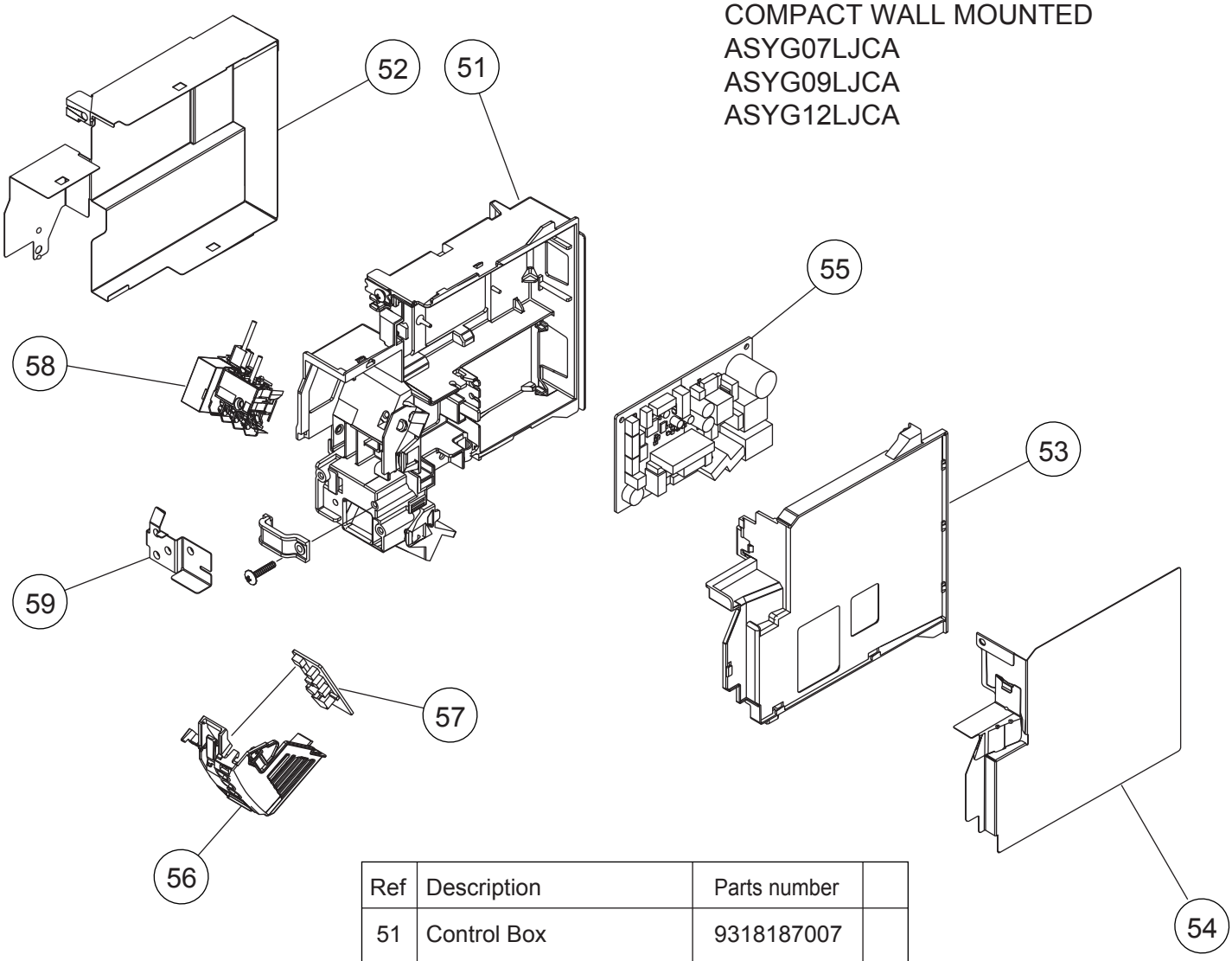

Ref	Description	Parts number	
51	Control Box	9318187007	
52	Box Shield	9317575010	
53	Control Cover	9317659017	
54	Cover Shield	9317923002	
55	Controller PCB Assy (07)	9708536088	
55	Controller PCB Assy (09)	9708536095	
55	Controller PCB Assy (12)	9708536101	
56	Display Case	9317662000	
57	Display PCB Assy	9707649024	
58	Terminal	9900529017	
59	Earth Terminal	9316586000	

INDOOR UNIT
WALL MOUNTED
ASYG18LFCA
ASYG24LFCA

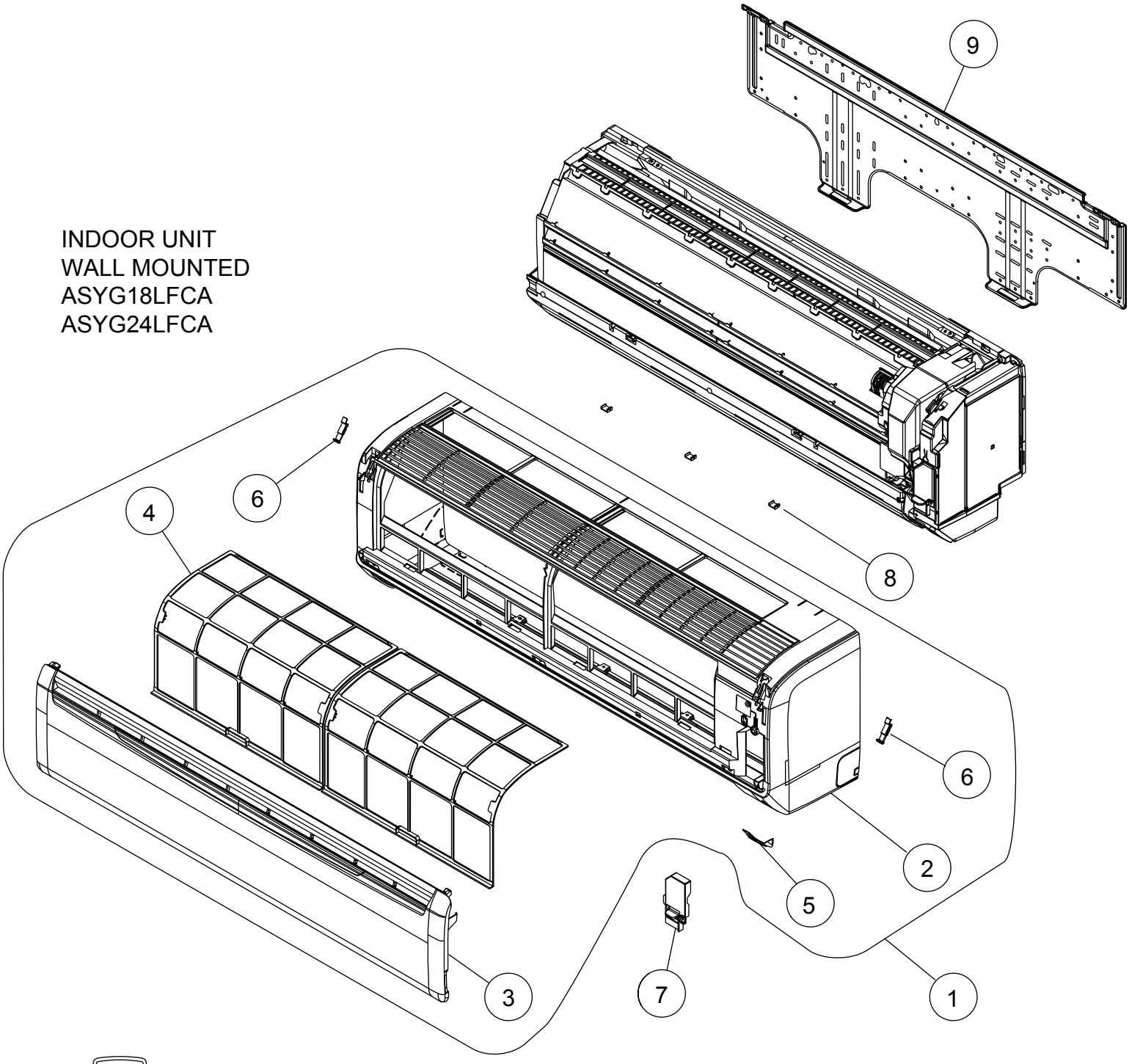

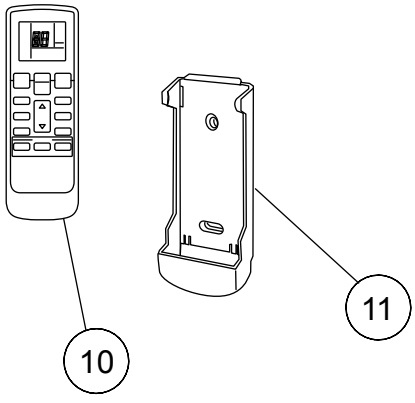

Ref	Description	Parts number	
1	Front Panel Total Assy	9318738001	
2	Front Panel	9314991080	
3	Intake Grille Assy	9385985049	
4	Air Filter	9315014016	
5	Receiver Window	9315010018	
6	Clamper Grille	9306755010	
7	Wire Clamper	9315015013	
8	Cap (Screw)	9309002050	
9	Bracket Panel	9315023018	
10	Remote Control	9379219037	
11	Remote Control Holder	9305642045	
--	Air Clean Filter Assy	9315212016	

INDOOR UNIT
WALL MOUNTED
ASYG18LFCA
ASYG24LFCA

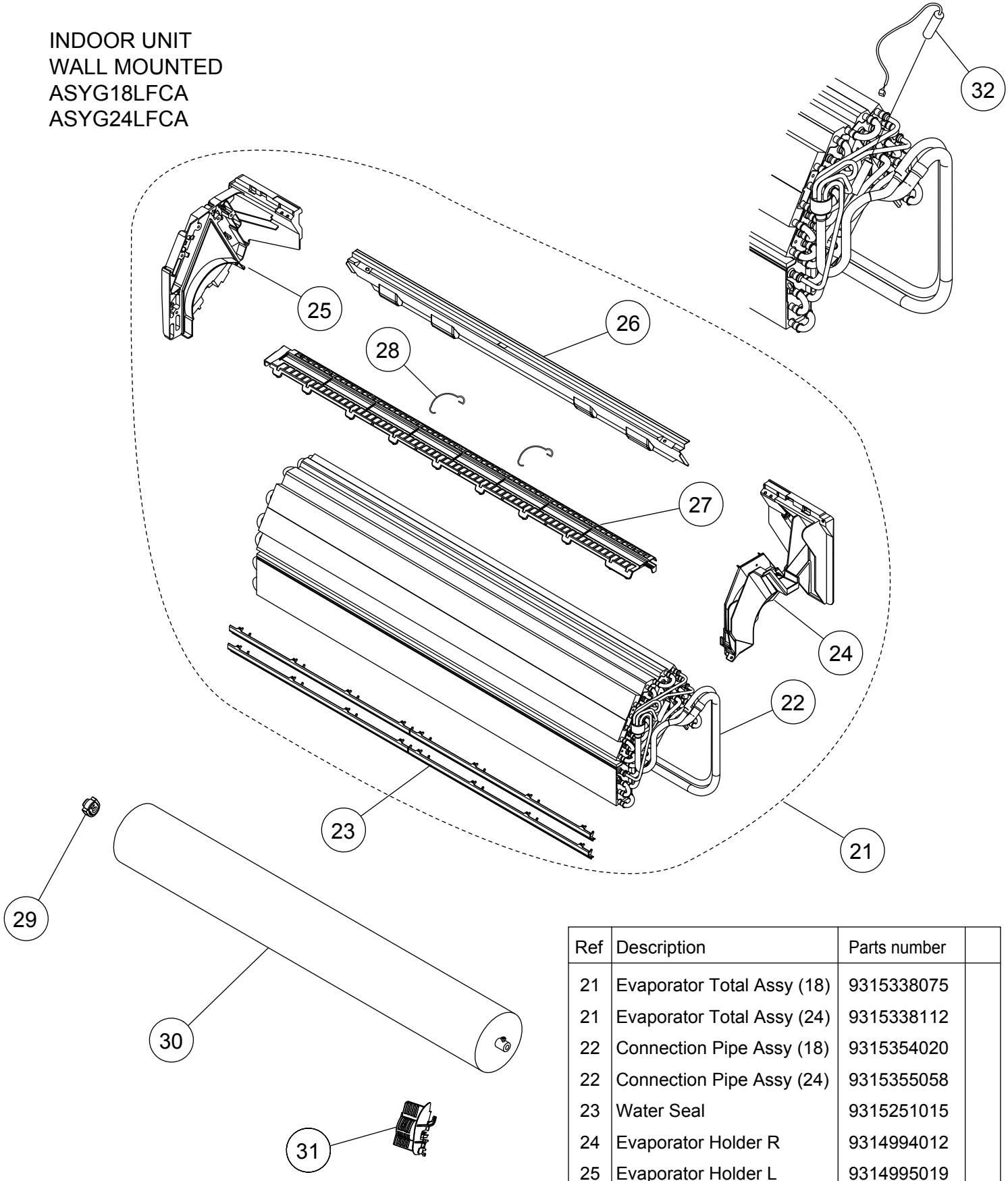

Ref	Description	Parts number	
21	Evaporator Total Assy (18)	9315338075	
21	Evaporator Total Assy (24)	9315338112	
22	Connection Pipe Assy (18)	9315354020	
22	Connection Pipe Assy (24)	9315355058	
23	Water Seal	9315251015	
24	Evaporator Holder R	9314994012	
25	Evaporator Holder L	9314995019	
26	Rear Bracket	9315022011	
27	Filter Guide	9315013019	
28	Filter Guard	9315411013	
29	Bearing C Assy	9306628017	
30	Crossflow Fan Assy	9315024015	
31	Holder (Room Thermistor)	9315252012	
32	Pipe Thermistor	9900551018	

INDOOR UNIT
WALL MOUNTED
ASYG18LFCA
ASYG24LFCA

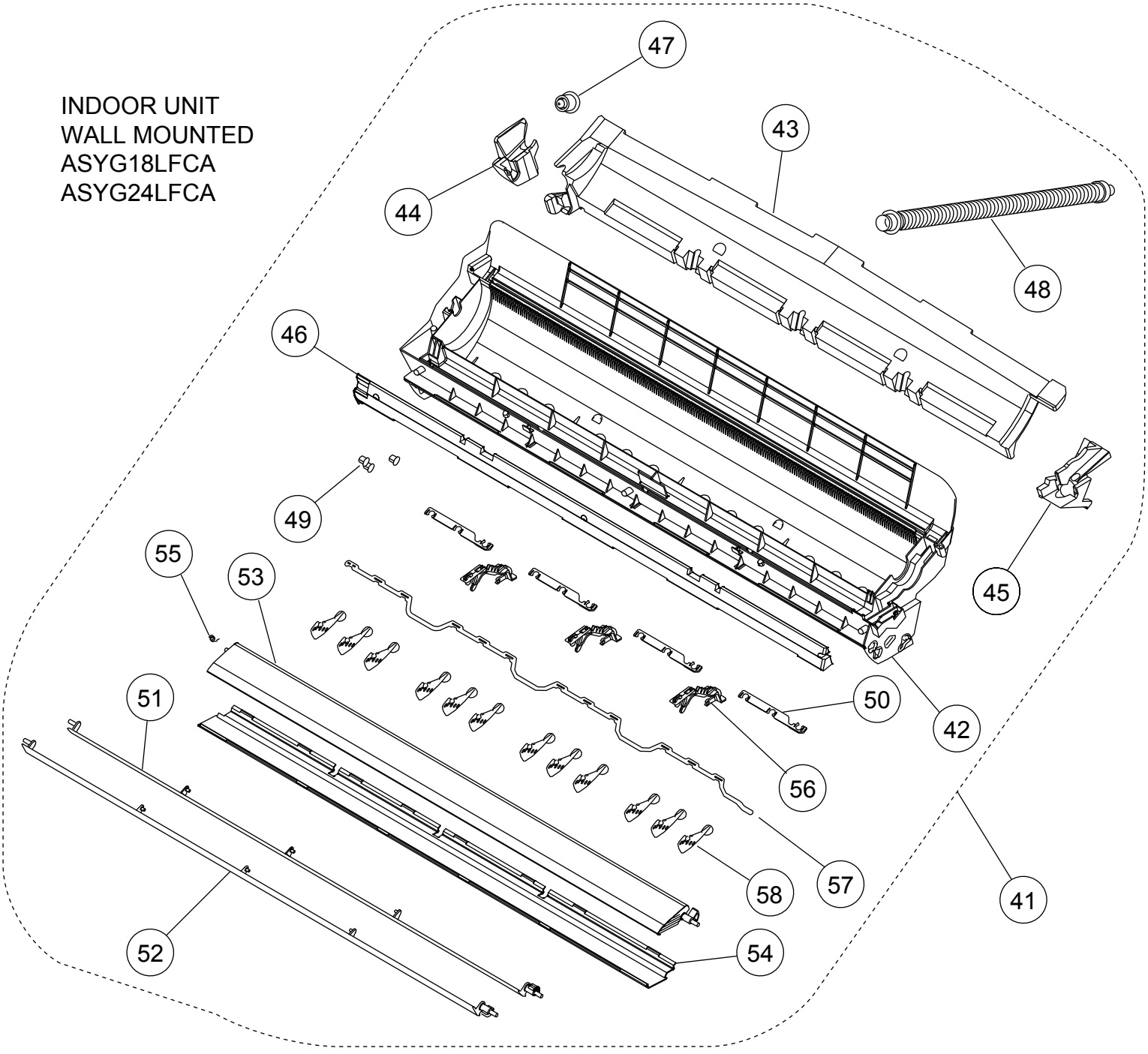

Ref	Description	Parts number	
41	Casing Assy (18)	9315331038	
41	Casing Assy (24)	9315331045	
42	Casing	9314993015	
43	Casing Cover B	9315016010	
44	Casing Cover L	9315017017	
45	Casing Cover R	9315018014	
46	Casing Cover F	9315019011	
47	Drain Cap	9367677009	
48	Drain Hose Assy	9315769015	
49	Bush B	9312156016	
50	Spacer B	9312441013	

Ref	Description	Parts number	
51	Louver U	9315000019	
52	Louver Z	9315001016	
53	Diffuser U	9315002013	
54	Diffuser Z	9315003010	
55	Spring C	9314142017	
56	Piller A	9315009012	
57	Joint B	9315006011	
58	R and L Louver	9311997016	
-	Fan Guard	9305751051	
-	Fan Guard Holder Right	9315814012	
-	Fan Guard Holder Left	9315815019	

INDOOR UNIT
WALL MOUNTED
ASYG18LFCA
ASYG24LFCA

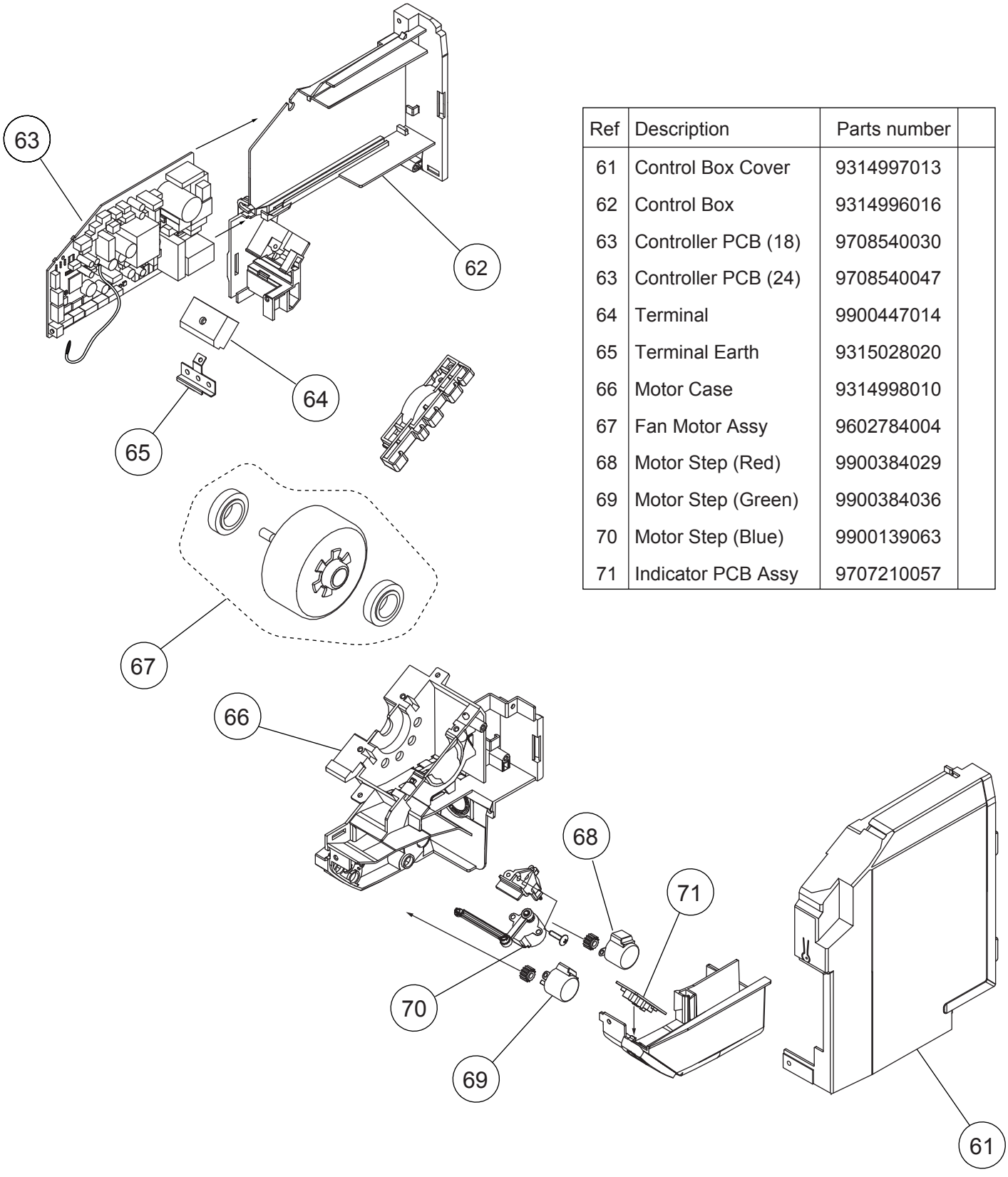

Ref	Description	Parts number	
61	Control Box Cover	9314997013	
62	Control Box	9314996016	
63	Controller PCB (18)	9708540030	
63	Controller PCB (24)	9708540047	
64	Terminal	9900447014	
65	Terminal Earth	9315028020	
66	Motor Case	9314998010	
67	Fan Motor Assy	9602784004	
68	Motor Step (Red)	9900384029	
69	Motor Step (Green)	9900384036	
70	Motor Step (Blue)	9900139063	
71	Indicator PCB Assy	9707210057	

DECORATION PANEL
UTG-UFYD-W

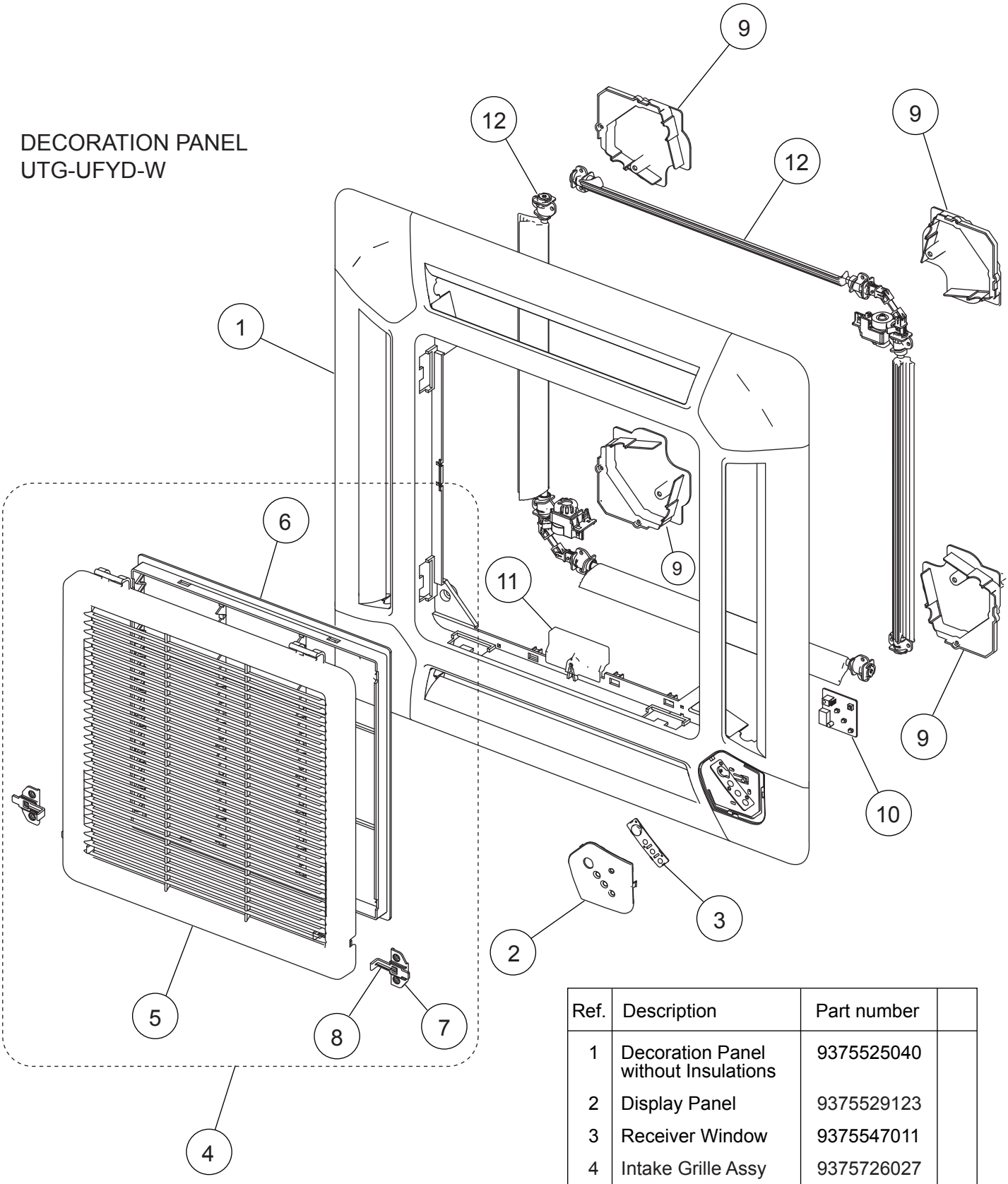

Ref.	Description	Part number	
1	Decoration Panel without Insulations	9375525040	
2	Display Panel	9375529123	
3	Receiver Window	9375547011	
4	Intake Grille Assy	9375726027	
5	Intake Grille	9375531027	
6	Long Life Filter	9375533014	
7	Hook Bracket	9375546014	
8	Grille Hook	9375532024	
9	Panel Cover without Insulations	9375530013	
10	Indicator PCB Assy	9707371031	
11	Connector Cover	9375549015	
12	Flap Total Assy	9377760029	

DECORATION PANEL
UTG-UFYD-W

Flap total assy
Motor holder assy

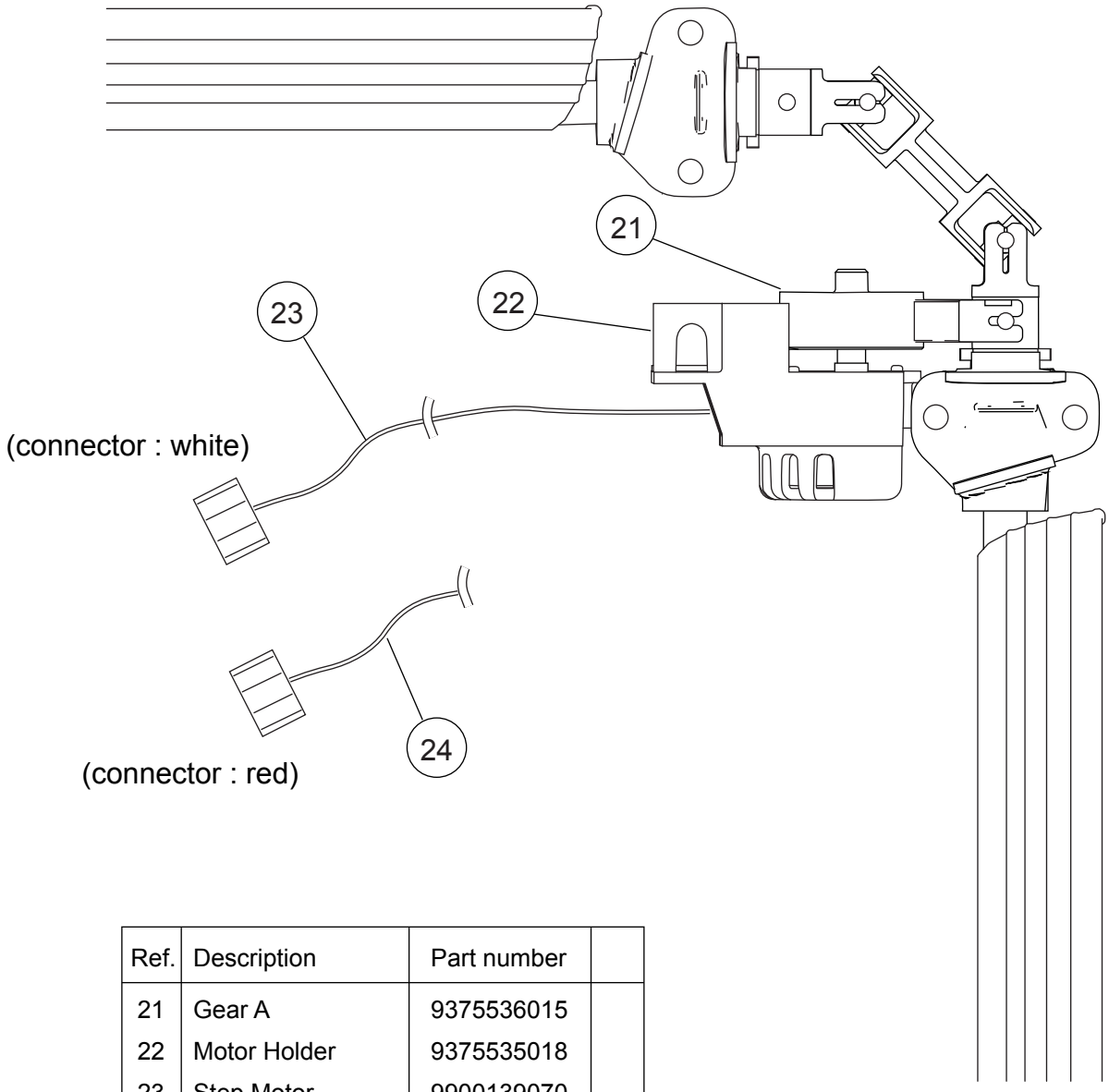

Ref.	Description	Part number	
21	Gear A	9375536015	
22	Motor Holder	9375535018	
23	Step Motor (white connector)	9900139070	
24	Step Motor (red connector)	9900139087	

INDOOR UNIT
COMPACT CASSETTE
AUYG07LVLA
AUYG09LVLA
AUYG12LVLA
AUYG14LVLA
AUYG18LVLA

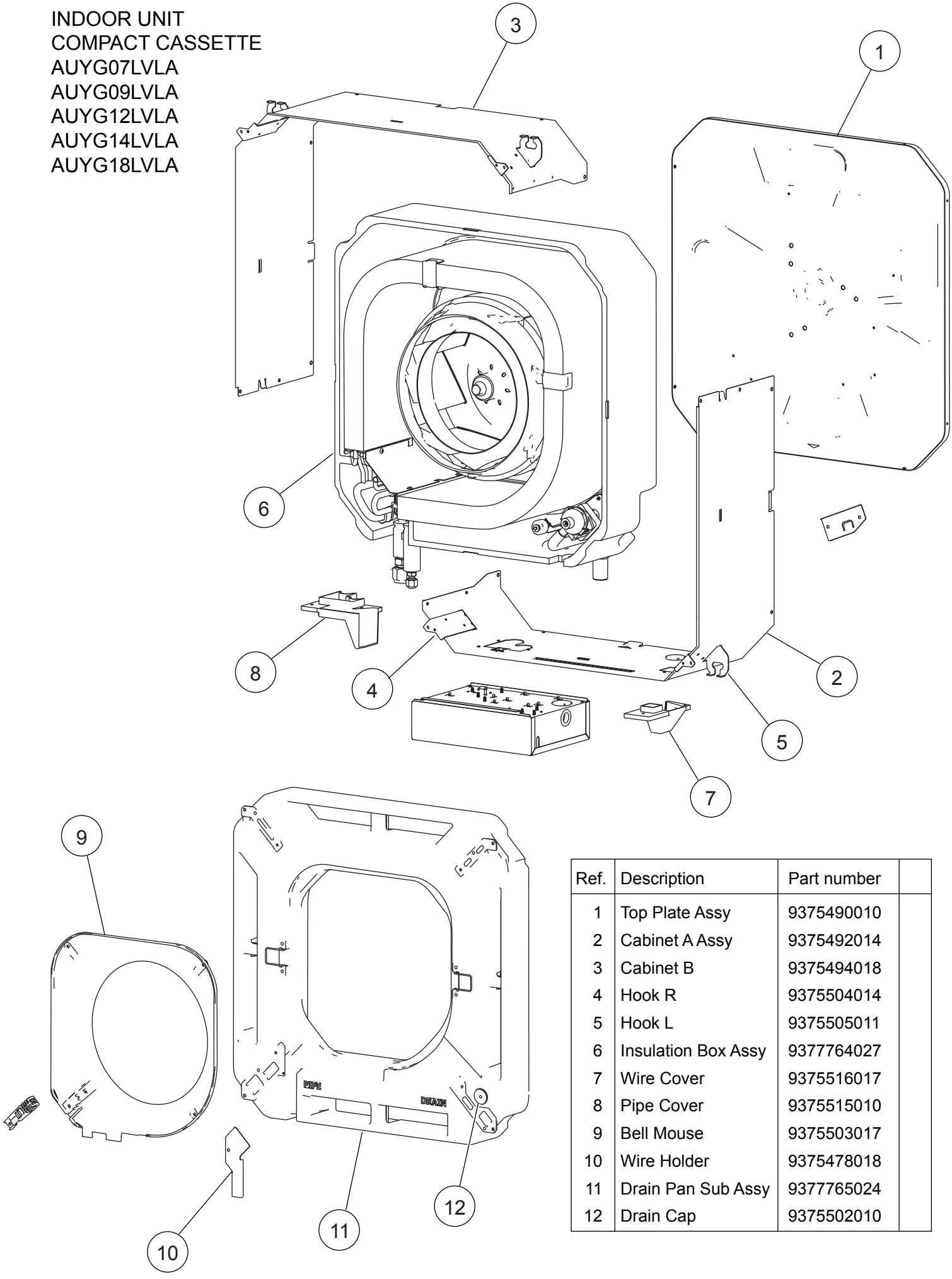

Ref.	Description	Part number	
1	Top Plate Assy	9375490010	
2	Cabinet A Assy	9375492014	
3	Cabinet B	9375494018	
4	Hook R	9375504014	
5	Hook L	9375505011	
6	Insulation Box Assy	9377764027	
7	Wire Cover	9375516017	
8	Pipe Cover	9375515010	
9	Bell Mouse	9375503017	
10	Wire Holder	9375478018	
11	Drain Pan Sub Assy	9377765024	
12	Drain Cap	9375502010	

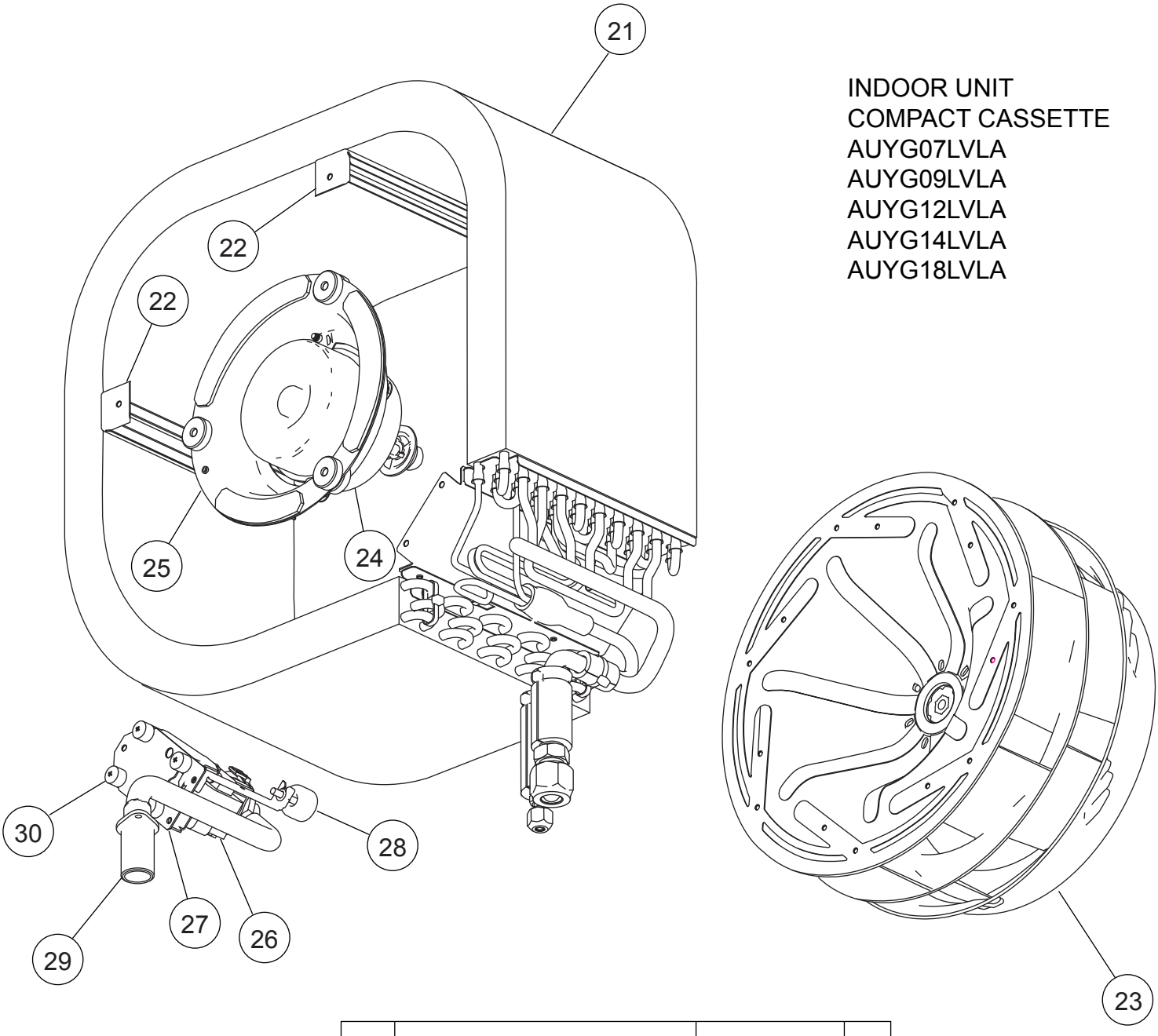

INDOOR UNIT
COMPACT CASSETTE
AUYG07LVLA
AUYG09LVLA
AUYG12LVLA
AUYG14LVLA
AUYG18LVLA

Ref.	Description	Part number	
21	Evaporator Total Assy (07)	9375720087	
21	Evaporator Total Assy (09, 12)	9375720032	
21	Evaporator Total Assy (14, 18)	9375720070	
22	Evaporator Holder	9375508012	
23	2 Stage Turbo Fan Assy	9375480011	
24	Fan Motor	9602436019	
25	Fan Motor Holder	9375552015	
26	Pump Assy	9900472030	
27	Drain Pump Holder B	9375518011	
28	Float Switch	9900361037	
29	Drain Port Sub Assy	9375718015	
30	Rubber (Pump)	9378426016	

INDOOR UNIT
COMPACT CASSETTE
AUYG07LVLA
AUYG09LVLA
AUYG12LVLA
AUYG14LVLA
AUYG18LVLA
Control unit

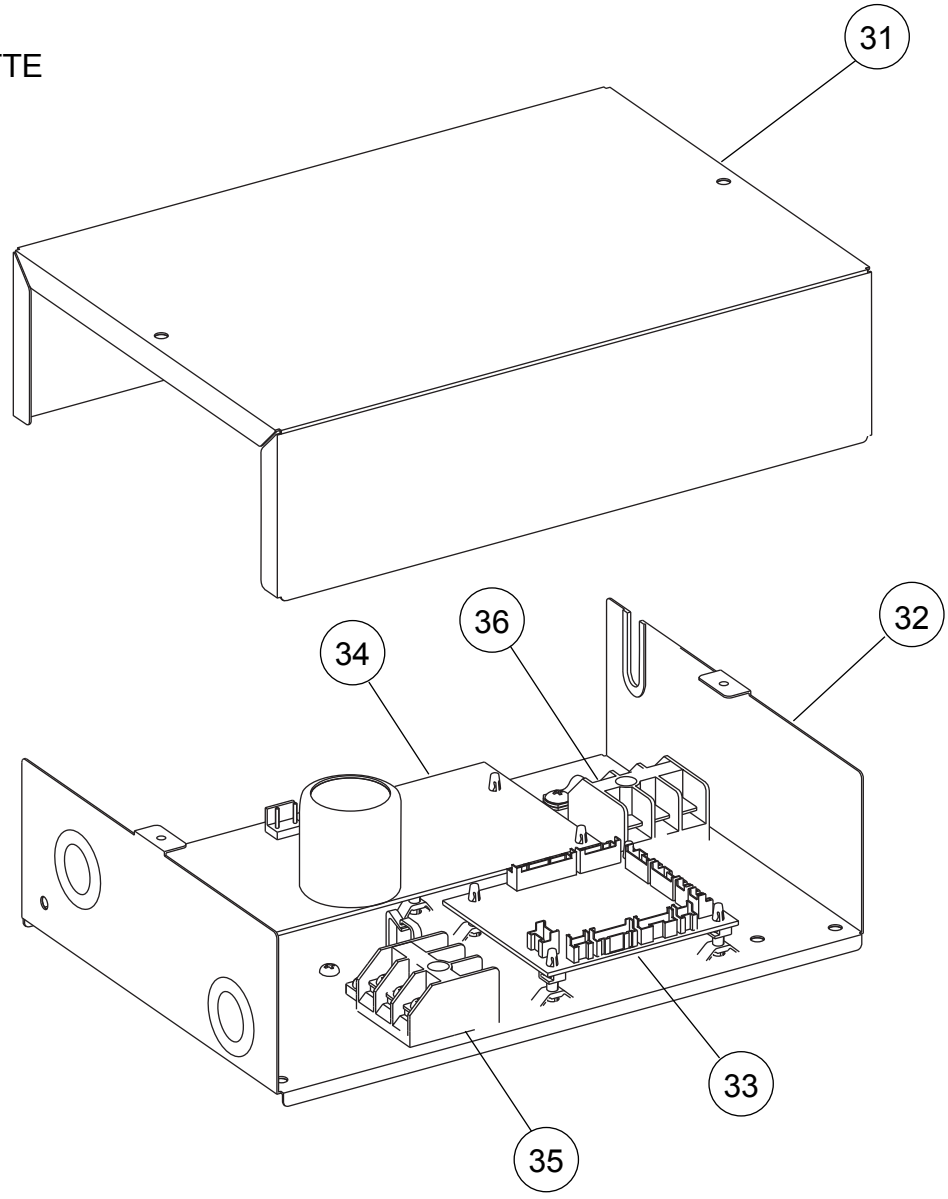

Ref.	Description	Part number	
31	Control Box Cover	9375512019	
32	Control Box A	9375511012	
33	Controller PCB Assy (07)	9707393736	
33	Controller PCB Assy (09)	9707393743	
33	Controller PCB Assy (12)	9707393750	
33	Controller PCB Assy (14)	9707393767	
33	Controller PCB Assy (18)	9707393774	
34	Power Supply PCB Assy	9707398250	
35	Terminal	9306489045	
36	Terminal	9703345012	
--	Pipe Thermistor	9703297014	
--	Room Thermistor	9900502003	
--	Remote	9379219006	
--	Remote Holder	9305642045	

INDOOR UNIT
FLOOR
AGYG09LVCA
AGYG12LVCA
AGYG14LVCA

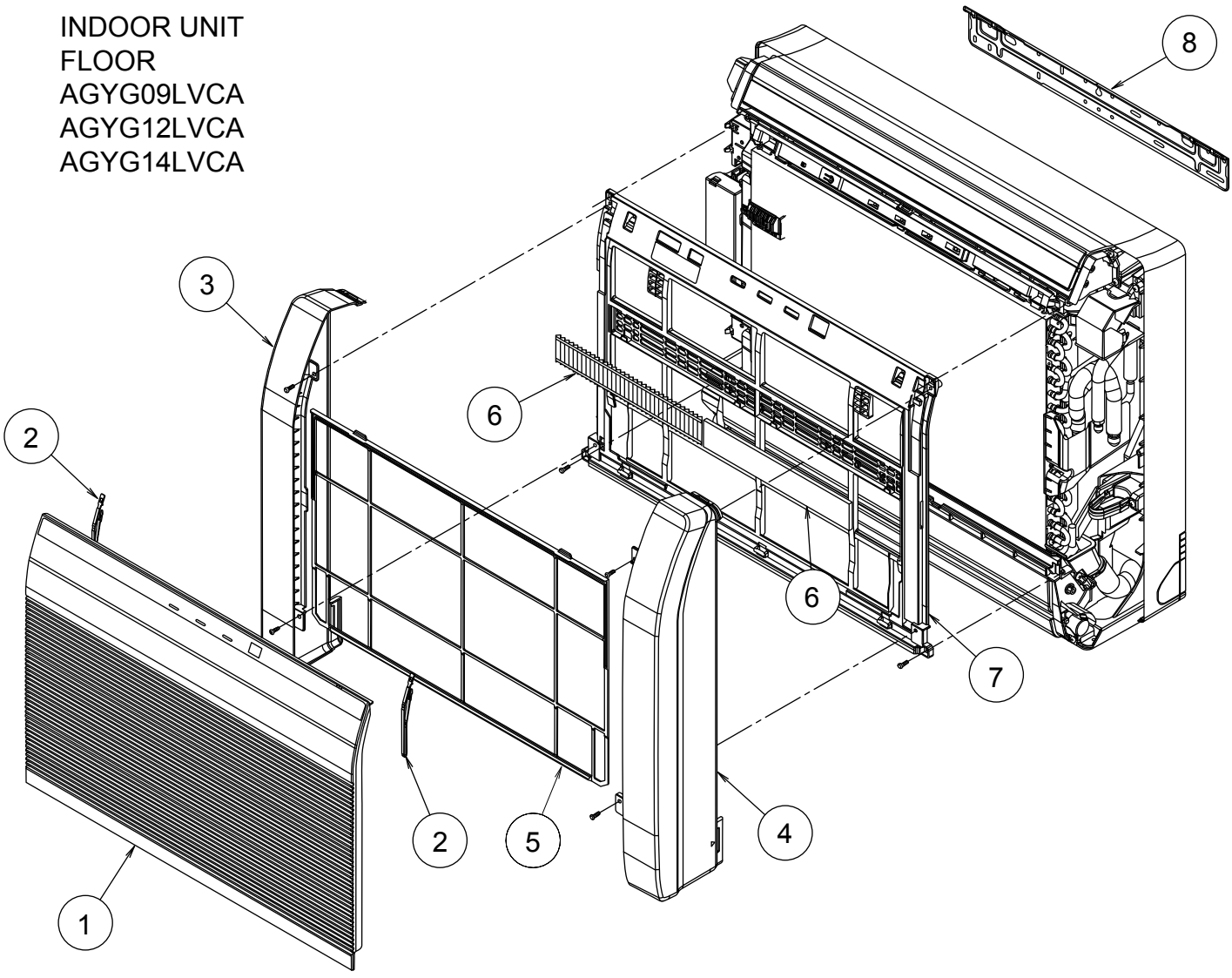

Ref	Description	Parts number	
1	Intake Grille Assy	9316418059	
2	Rope Assy	9316458017	
3	Panel (Front) L	9316187016	
4	Panel (Front) R	9316186019	
5	Air Filter	9316189010	
6	Air Clean Filter Assy	9316474017	
7	Panel (Front)	9316185012	
8	Bracket Panel	9316272019	
--	Remote	9379219006	
--	Remote Holder	9305642045	

INDOOR UNIT
FLOOR
AGYG09LVCA
AGYG12LVCA
AGYG14LVCA

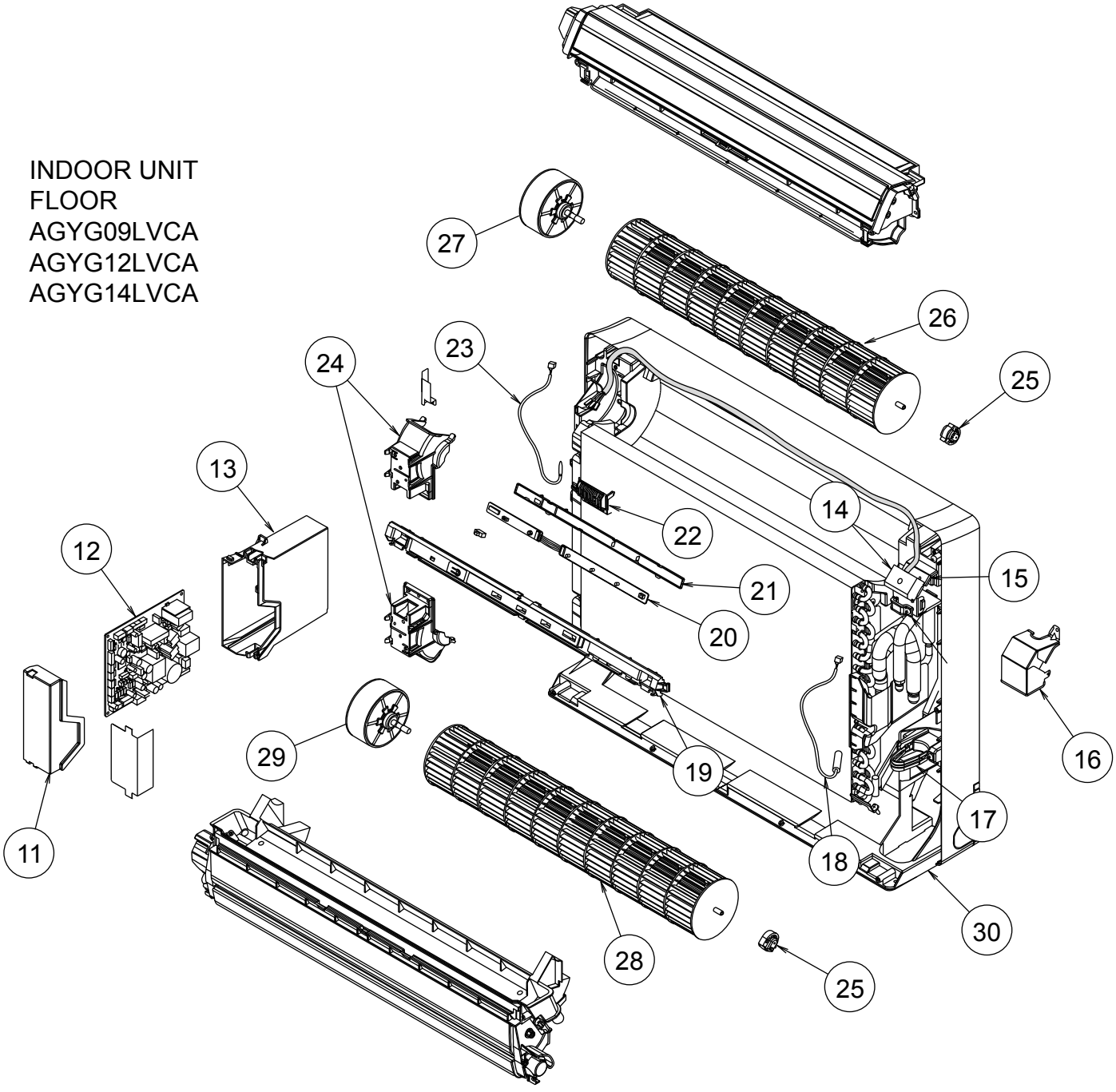

Ref	Description	Parts number	
11	Control Cover	9316201019	
12	Controller PCB Assy (09)	9708532011	
12	Controller PCB Assy (12)	9708532028	
12	Controller PCB Assy (14)	9708532035	
13	Control Box	9316200012	
14	Terminal	9900385026	
15	Bracket (Terminal)	9316269019	
16	Cover (Terminal)	9316307018	
17	Bracket (Pipe)	9316270015	
18	Pipe Thermistor	9900425012	
19	Display Case	9316194014	

Ref	Description	Parts number	
20	Display PCB Assy	9707571042	
21	Display Cover	9316191013	
22	Thermistor Holder	9316192010	
23	Room Thermistor	9700801108	
24	Motor Holder	9316195011	
25	Bearing C Assy	9306628017	
26	Crossflow Fan Assy	9312004034	
27	Fan Motor, MFD-34TXN	9602850006	
28	Crossflow Fan B Assy	9316309012	
29	Fan Motor, MFD-14SXN	9602851003	
30	Base	9316193017	

INDOOR UNIT
FLOOR
AGYG09LVCA
AGYG12LVCA
AGYG14LVCA

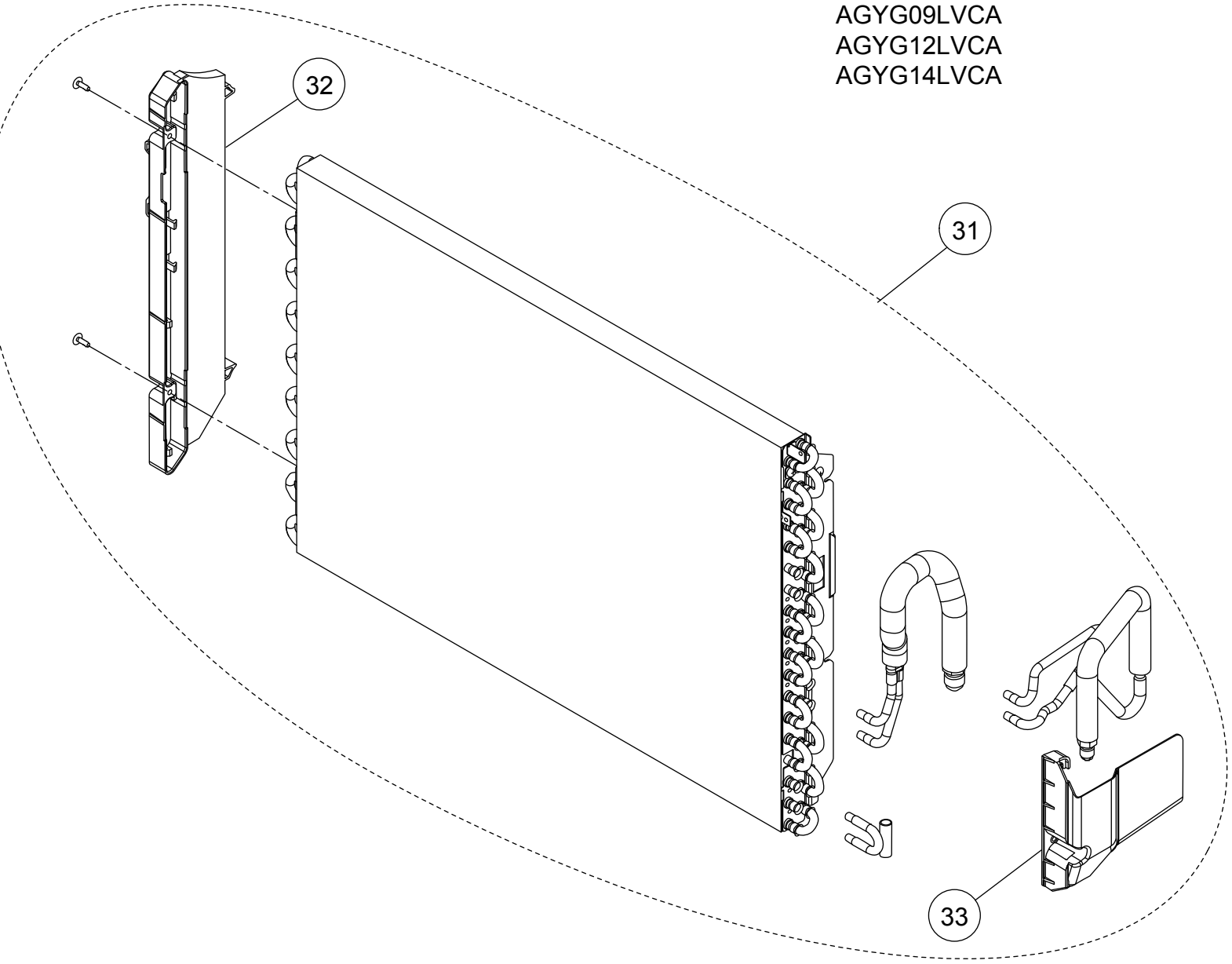

Ref	Description	Parts number	
31	Evaporator Total Assy (09, 12)	9316091016	
31	Evaporator Total Assy (14)	9316091023	
32	Evaporator Holder	9316199019	
33	Water Seal	9316271012	

INDOOR UNIT
FLOOR
AGYG09LVCA
AGYG12LVCA
AGYG14LVCA
Casing assy

Ref	Description	Parts number	
41	Top Cover	9316207011	
42	R and L Louver U	9316208018	
43	Fan Guard	9316211018	
44	Casing	9316204010	
45	Gear Case	9316213012	
46	Gear A	9309994003	
47	Motor Step (up / down)	9900384043	
48	Louver U	9316205017	
49	Louver Z	9316206014	
50	REF (Casing)	9316378018	

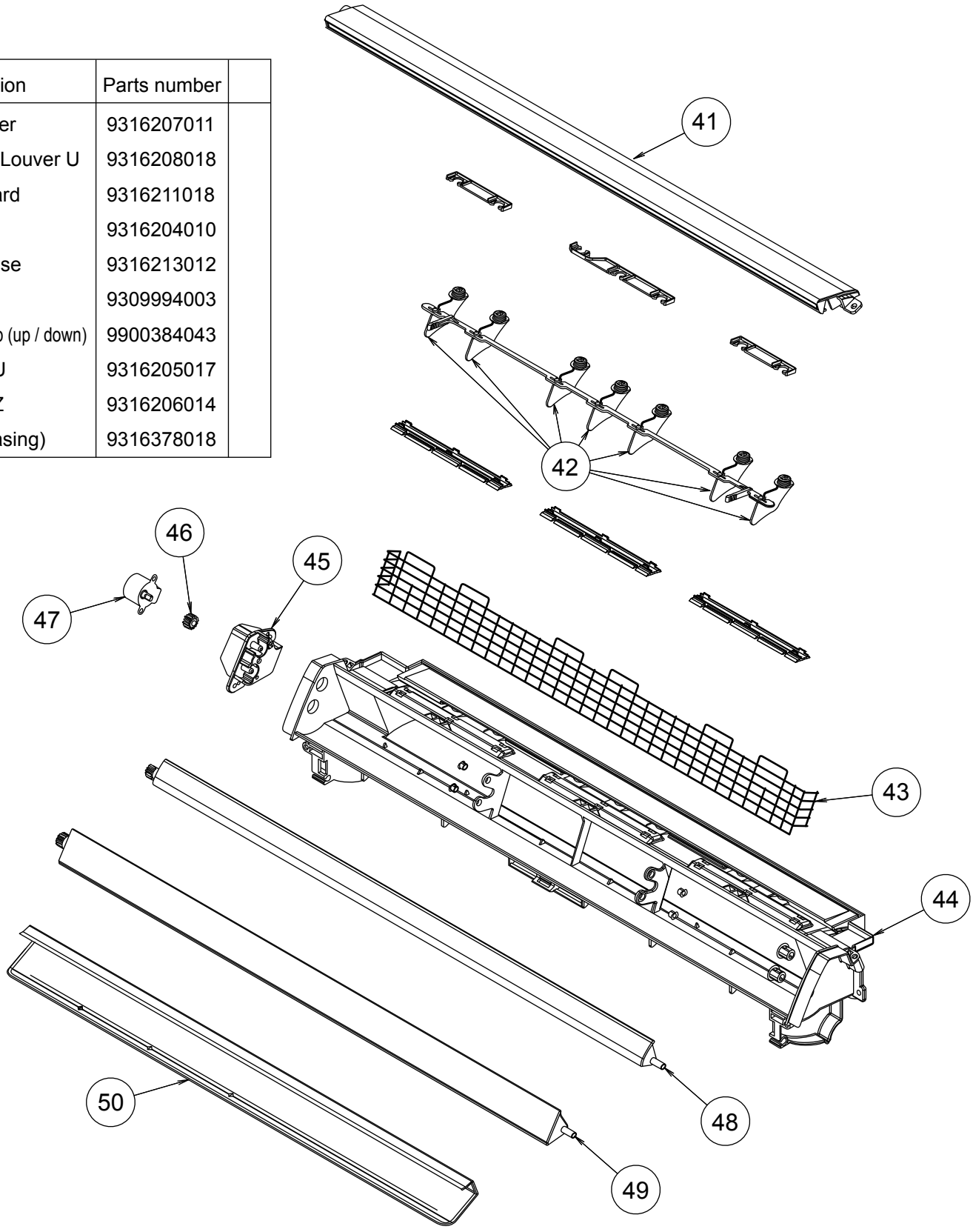

INDOOR UNIT
FLOOR
AGYG09LVCA
AGYG12LVCA
AGYG14LVCA
Casing aast

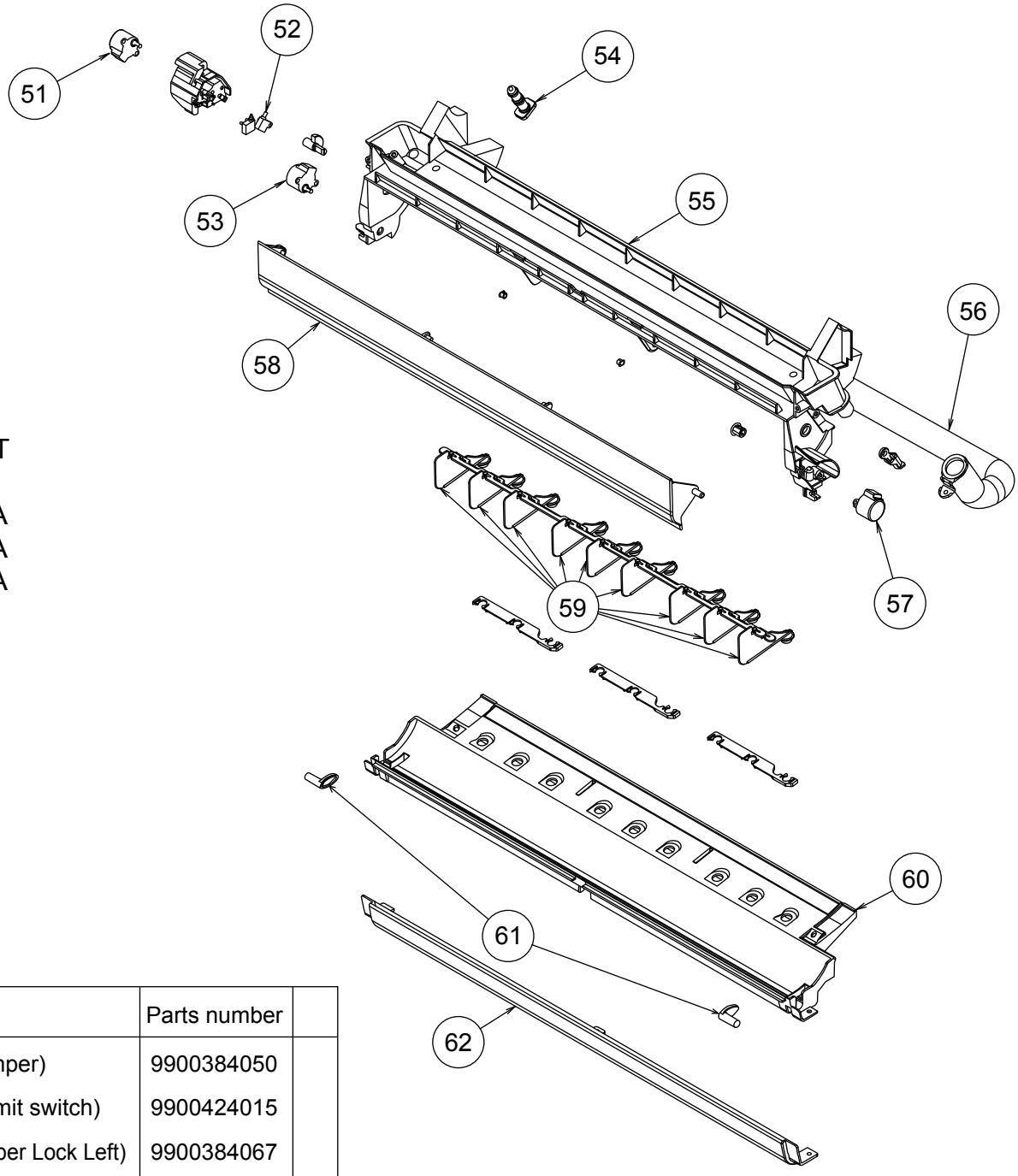

Ref	Description	Parts number	
51	Motor Step (Damper)	9900384050	
52	Switch Micro (Limit switch)	9900424015	
53	Motor Step (Damper Lock Left)	9900384067	
54	Drain Cap	9316177017	
55	Drain Pan U	9316214019	
56	Drain Hose Assy	9314147029	
57	Motor Step (Damper Lock Right)	9900384074	
58	Damper	9316216013	
59	R and L Louver Z	9316334014	
60	Drain Pan Z	9316215016	
61	Stopper	9316219014	
62	Cover (Lower)	9316374010	
--	Fan Guard Z	9316918009	

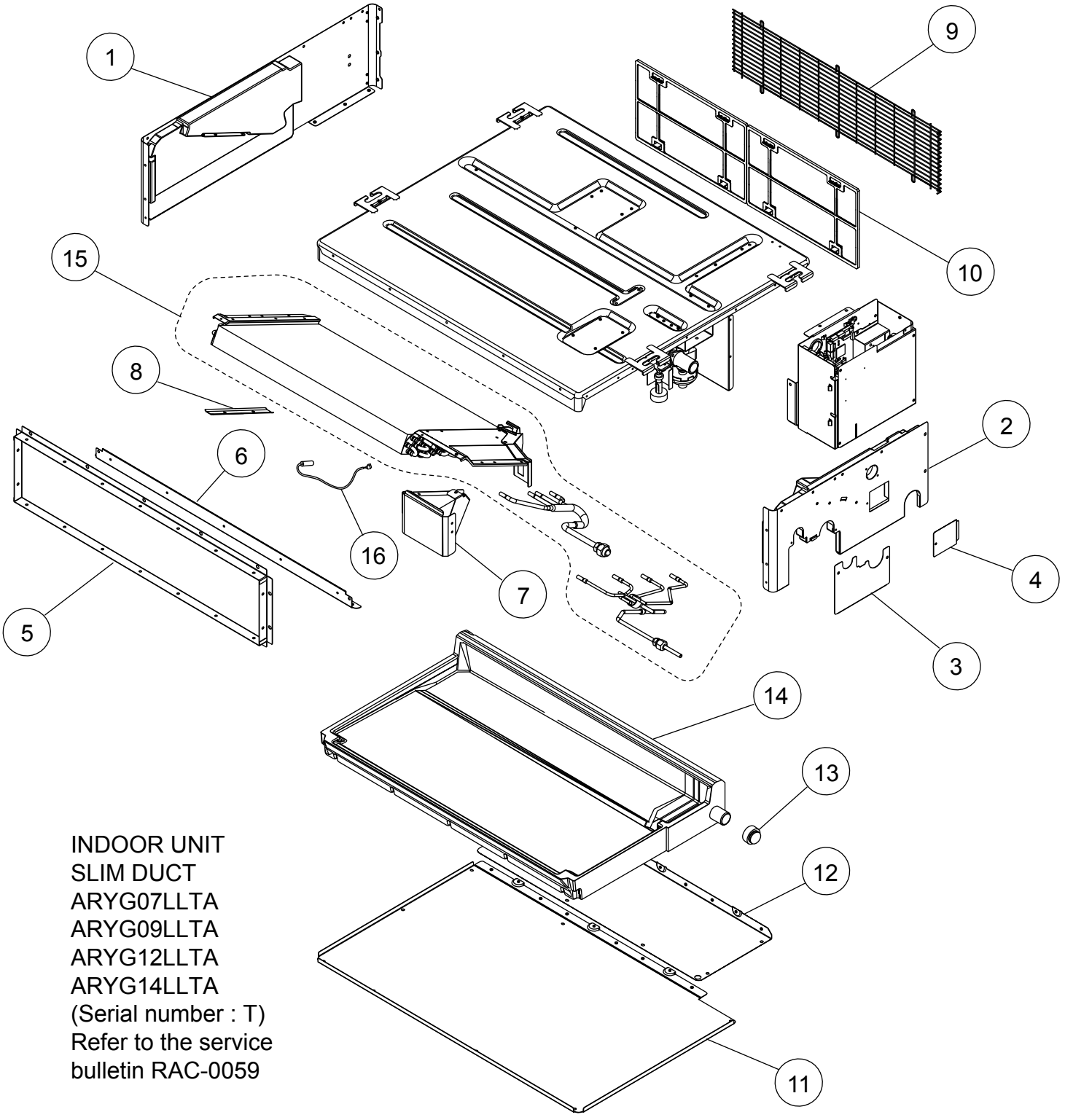

INDOOR UNIT
SLIM DUCT
ARYG07LLTA
ARYG09LLTA
ARYG12LLTA
ARYG14LLTA
(Serial number : T)
Refer to the service bulletin RAC-0059

Ref	Description	Parts number	
1	Side Panel R Sub Assy	9379906005	
2	Side Panel L Sub Assy	9379907002	
3	Pipe Panel Sub Assy	9379900003	
4	Panel (Window) Sub Assy	9379915007	
5	Outlet Frame Sub Assy	9379909006	
6	Front Panel (2 Fan)	9379593007	
7	Valve Cover Sub Assy	9379576000	
8	Cover Pipe Sub Assy	9380033004	
9	Fan Guard (2 Fan)	9379637008	
10	Air Filter	9379574006	

Ref	Description	Parts number	
11	Main Panel Sub Assy	9379902007	
12	Cabinet Panel (2 Fan)	9379596008	
13	Drain Cap	9358746004	
14	Drain Pan Sub Assy	9379901000	
15	Evaporater Total Assy (07)	9364499666	
15	Evaporater Total Assy (09, 12)	9364499581	
15	Evaporater Total Assy (14)	9364499673	
16	Pipe Thermistor	9900498085	
--	Hose Sub Assy	9378450103	

INDOOR UNIT
SLIM DUCT
ARYG07LLTA
ARYG09LLTA
ARYG12LLTA
ARYG14LLTA
(Serial number : T)

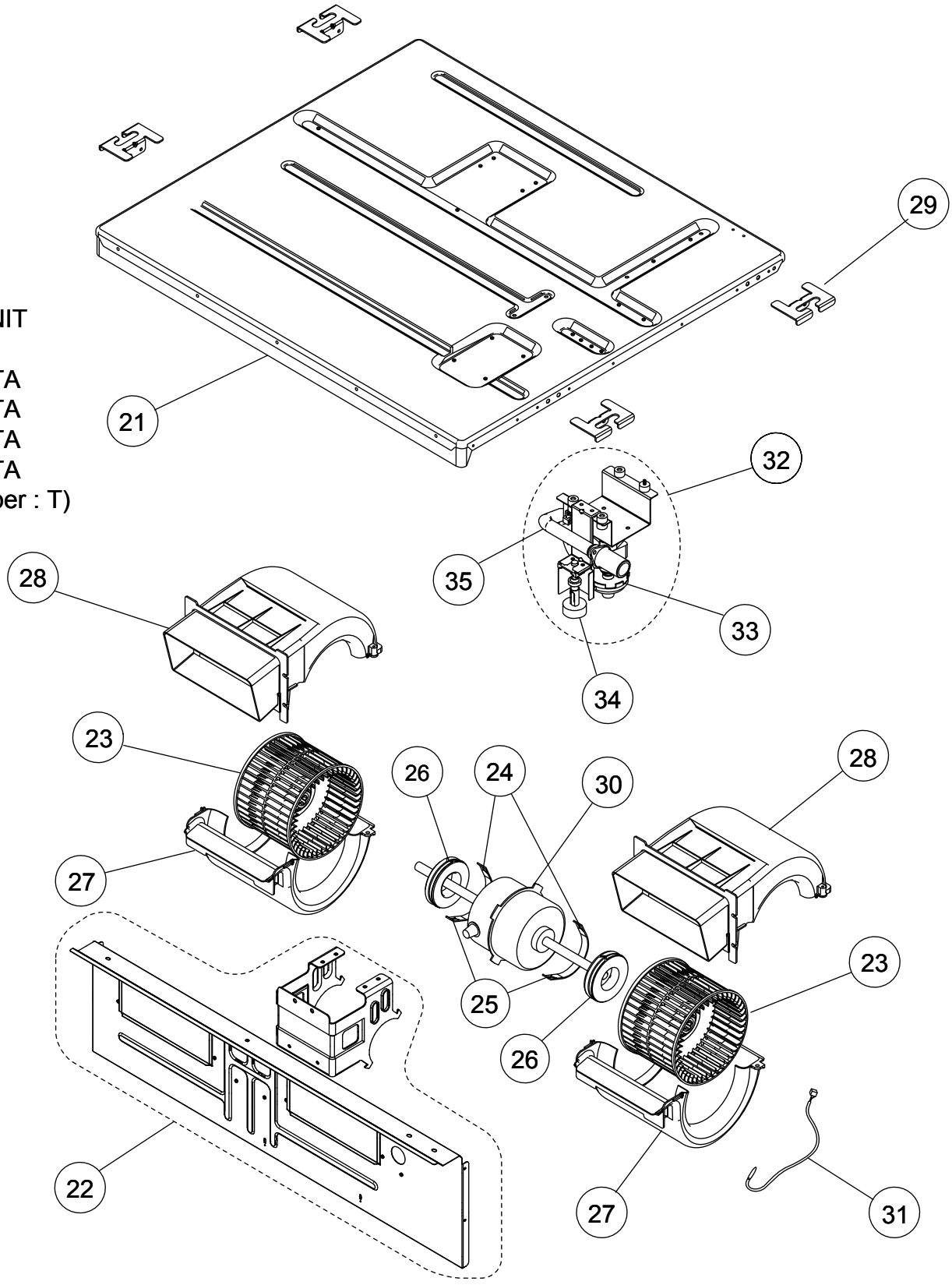

Ref	Description	Parts number	
21	Top Panel Sub Assy	9379908009	
22	Separator Sub Assy	9379898003	
23	Sirroco Fan Assy	9379570015	
24	Motor Band Assy	9379613002	
25	Motor Band	9379614009	
26	Rubber (Vibration Proof)	9379644006	
27	Casing B	9379572002	
28	Casing U	9379571005	

Ref	Description	Parts number	
29	Hook Metal	9379889001	
30	Fan Motor Assy (07)	9602966011	
30	Fan Motor Assy (09, 12, 14)	9602967018	
31	Room Thermistor	9703299247	
32	Drain Pump Sub Assy	9379914000	
33	Pump Assy	9900472047	
34	Float Switch	9900465032	
35	Drain Hose Assy	9379913003	

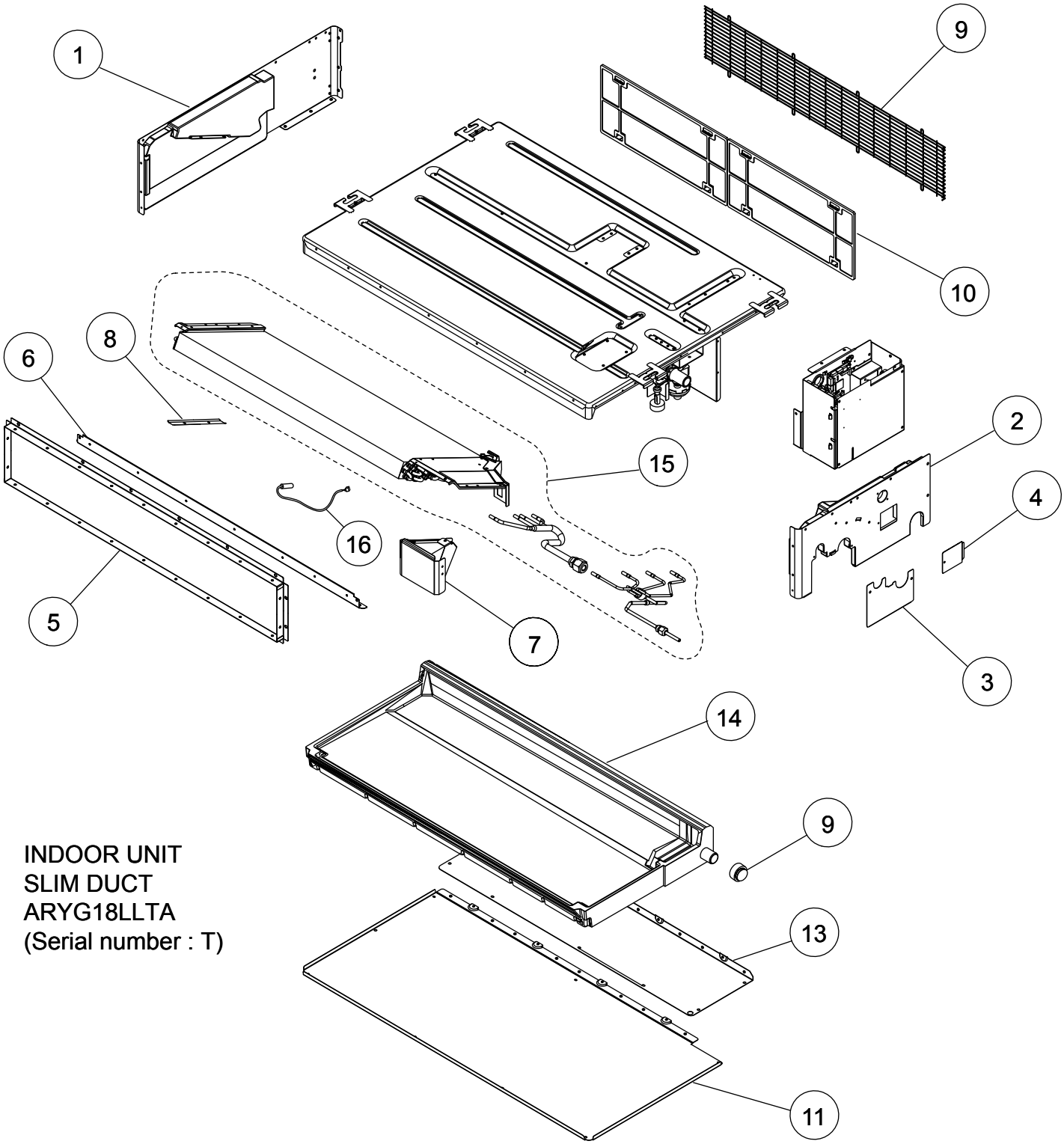

INDOOR UNIT
SLIM DUCT
ARYG18LLTA
(Serial number : T)

Ref	Description	Parts number	
1	Side Panel R Sub Assy	9379906005	
2	Side Panel L Sub Assy	9379907002	
3	Pipe Panel Sub Assy	9379900003	
4	Panel (Window) Sub Assy	9379915007	
5	Outlet Frame Sub Assy	9379909013	
6	Front Panel (3 Fan)	9379594004	
7	Valve Cover Sub Assy	9379576000	
8	Cover Pipe Sub Assy	9380033004	
9	Fan Guard (3 Fan)	9379638005	

Ref	Description	Parts number	
10	Air Filter	9379575003	
11	Main Panel Sub Assy	9379902014	
12	Cabinet Panel (3 Fan)	9379597005	
13	Drain Cap	9358746004	
14	Drain Pan Sub Assy	9379901017	
15	Evaporator Total Assy	9364499604	
16	Pipe Thermistor	9900498085	
--	Hose Sub Assy	9378450103	

INDOOR UNIT
SLIM DUCT
ARYG18LLTA
(Serial number : T)

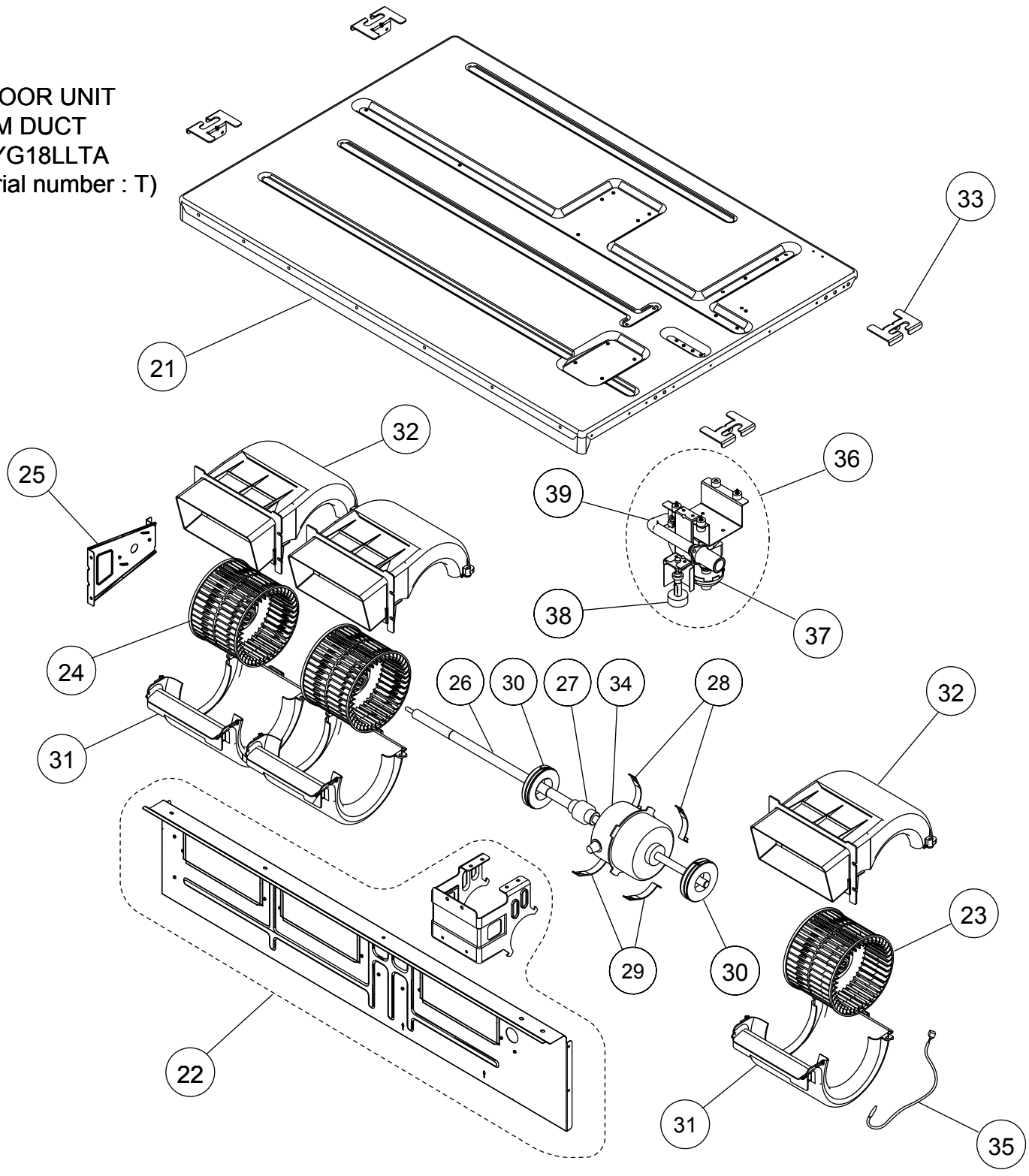

Ref	Description	Parts number	
21	Top Panel Sub Assy	9379908016	
22	Separator Sub Assy	9379898010	
23	Sirroco Fan Assy	9379570022	
24	Sirroco Fan Assy	9379570039	
25	Bracket (Bearing Sub Assy)	9379627009	
26	Shaft Assy	9379805001	
27	Joint Assy	9378038011	
28	Motor Band Assy	9379613002	
29	Motor Band	9379614009	
30	Rubber (Vibration Proof)	9379644006	

Ref	Description	Parts number	
31	Casing B	9379572002	
32	Casing U	9379571005	
33	Hook Metal	9379889001	
34	Fan Motor Assy	9602968015	
35	Thermistor (Room)	9703299247	
36	Drain Pump Sub Assy	9379914000	
37	Pump Assy	9900472047	
38	Float Switch	9900465032	
39	Drain Hose Assy	9379913003	

INDOOR UNIT
SLIM DUCT
ARYG07LLTA
ARYG09LLTA
ARYG12LLTA
ARYG14LLTA
ARYG18LLTA
(Serial number : T)

Ref	Description	Parts number	
41	Control Cover Sub Assy	9379806039	
42	Control Box Assy	9380041023	
43	PCB Holder	9379402002	
44	Power Supply PCB	9707398267	
45	Controller PCB (07)	9707393781	
45	Controller PCB (09)	9707393798	
45	Controller PCB (12)	9707393804	
45	Controller PCB (14)	9707393811	
45	Controller PCB (18)	9707393828	
46	Reactor Assy	9707457018	
47	Terminal 3P	9306489045	
48	Terminal 3P (Wired Remote)	9703345012	
49	Terminal Bracket	9380132011	
--	Wired Remote Control	9318593013	

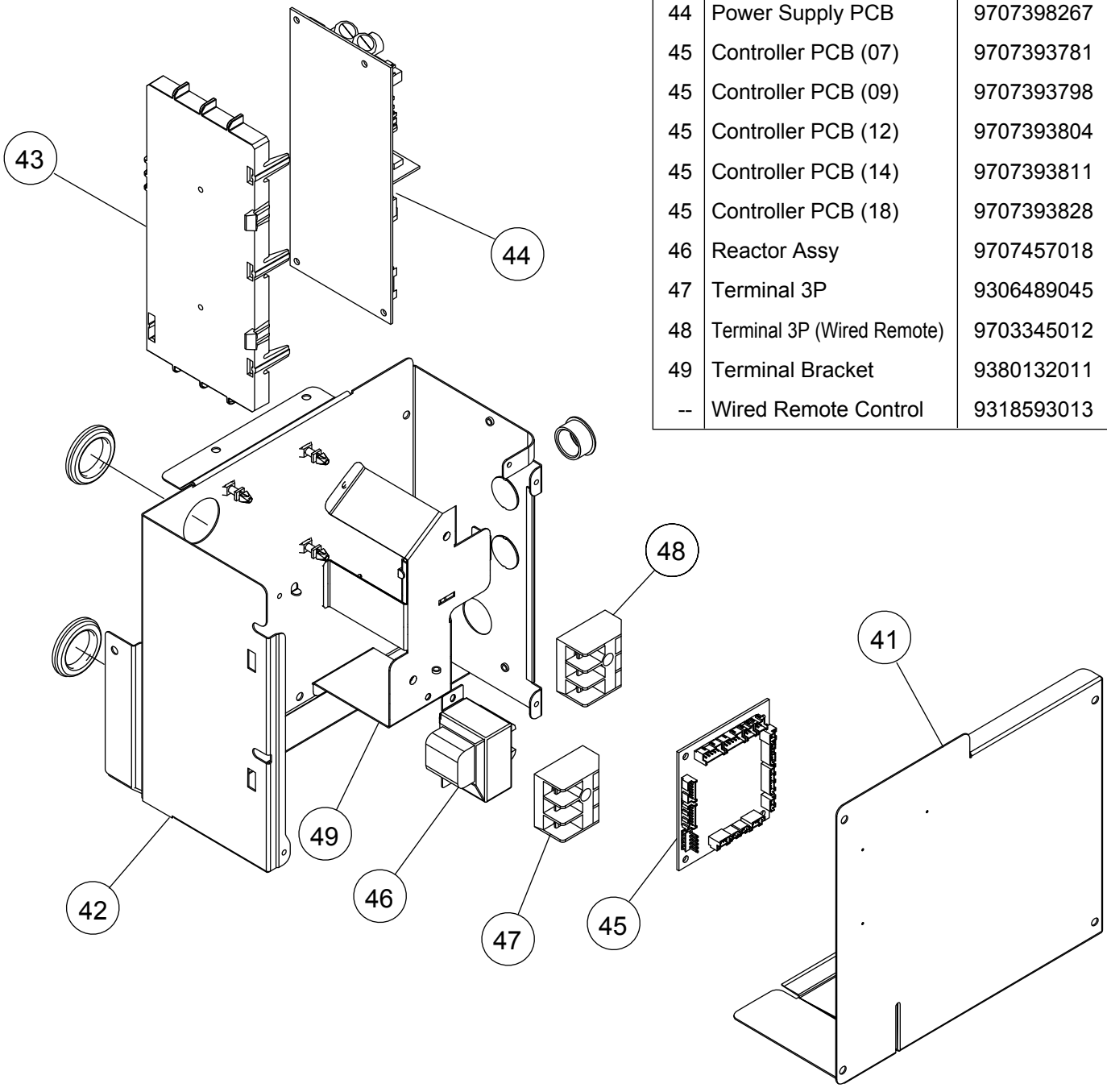

INDOOR UNIT
SLIM DUCT
ARYG07LLTA
ARYG09LLTA
ARYG12LLTA
ARYG14LLTA
(Serial number : R)
Refer to the service bulletin RAC-0059

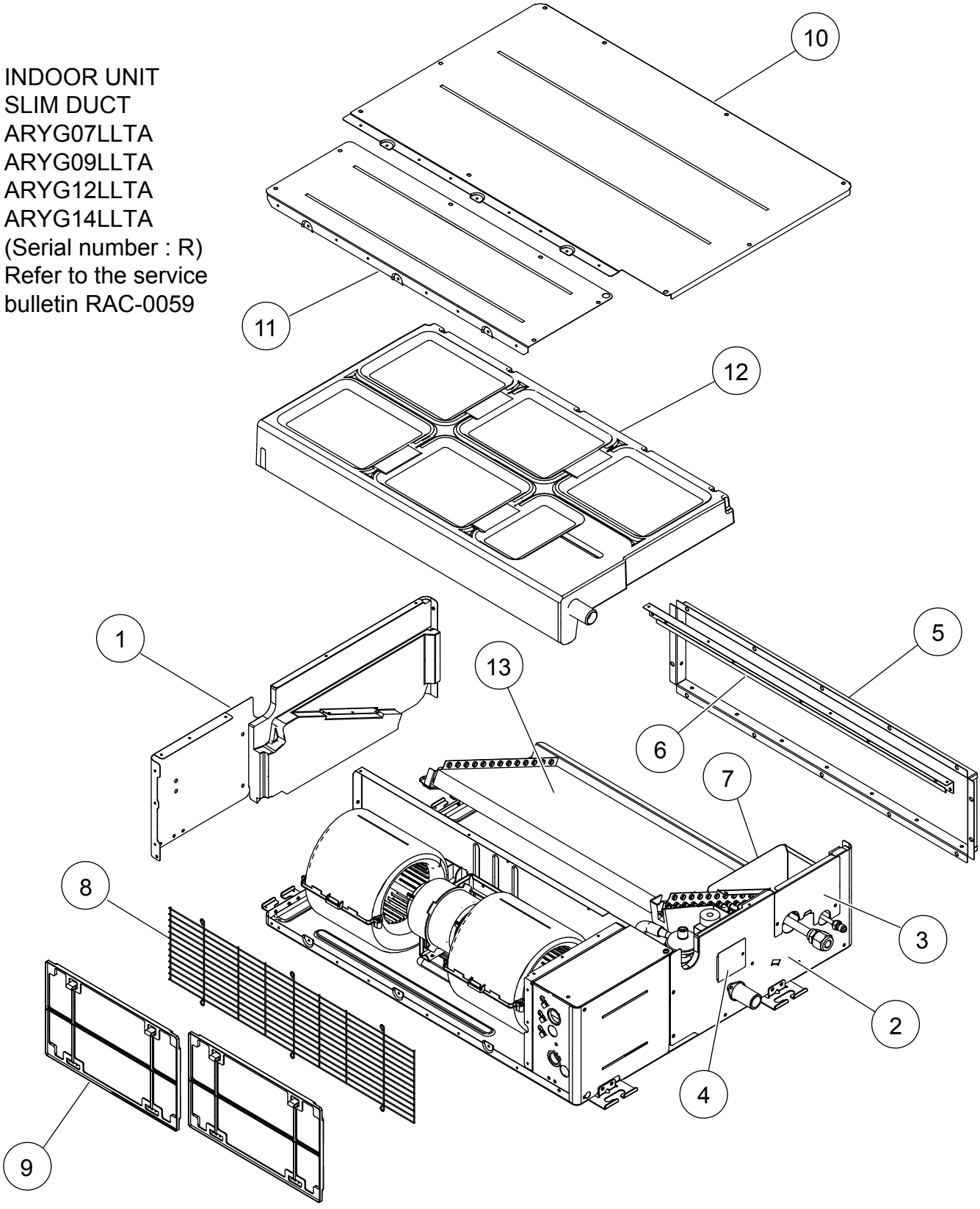

Ref	Description	Parts number	
1	Side Panel R Sub Assy	9379906012	
2	Side Panel L Sub Assy	9379907019	
3	Pipe Panel Sub Assy	9379900003	
4	Panel (Window) Sub Assy	9379915007	
5	Outlet Frame Assy	9380042006	
6	Front Panel (2 Fan)	9380594000	
7	Valve Cover Sub Assy	9379576017	
8	Fan Guard (2 Fan)	9380589006	

Ref	Description	Parts number	
9	Air Filter	9379574006	
10	Main Panel (2 Fan)	9380602002	
11	Cabinet Panel (2 Fan)	9380597001	
12	Drain Pan Sub Assy	9379901048	
13	Evaporater Total Assy (07)	9380682080	
13	Evaporater Total Assy (09, 12)	9380682042	
13	Evaporater Total Assy (14)	9380682059	

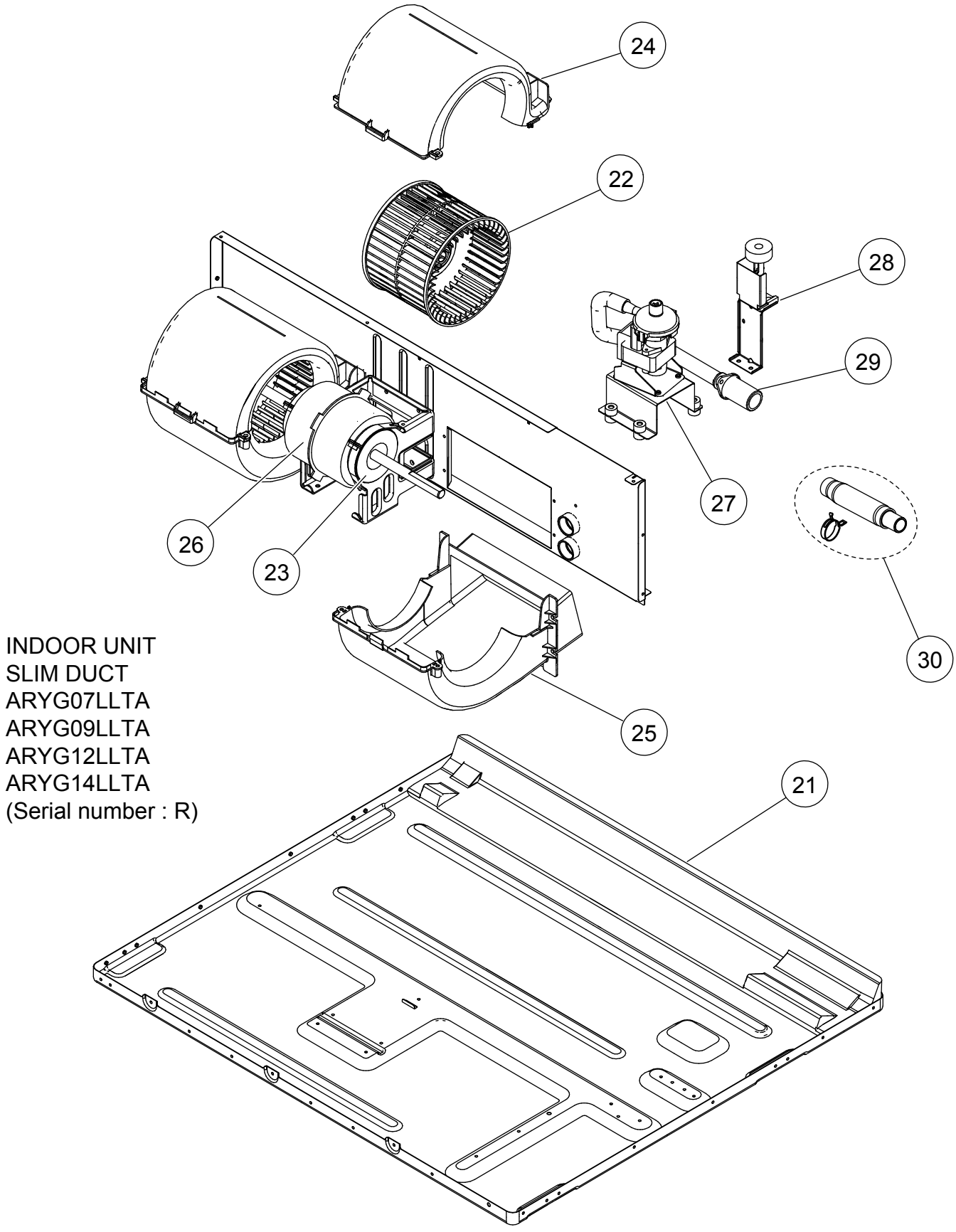

INDOOR UNIT
SLIM DUCT
ARYG07LLTA
ARYG09LLTA
ARYG12LLTA
ARYG14LLTA
(Serial number : R)

Ref	Description	Parts number	
21	Top Panel Sub Assy	9379908030	
22	Sirroco Fan Assy	9379570015	
23	Rubber (Vibration Proof)	9379644006	
24	Casing B	9379572002	
25	Casing U	9379571005	
26	Fan Motor Assy (07)	9603139018	

Ref	Description	Parts number	
26	Fan Motor (09, 12, 14)	9602967025	
27	Drain Pump Sub Assy	9379914024	
28	Float Switch Sub Assy	9378593022	
29	Drain Hose Assy	9379913003	
30	Hose Sub Assy	9378450097	

INDOOR UNIT
SLIM DUCT
ARYG18LLTA
(Serial number : R)

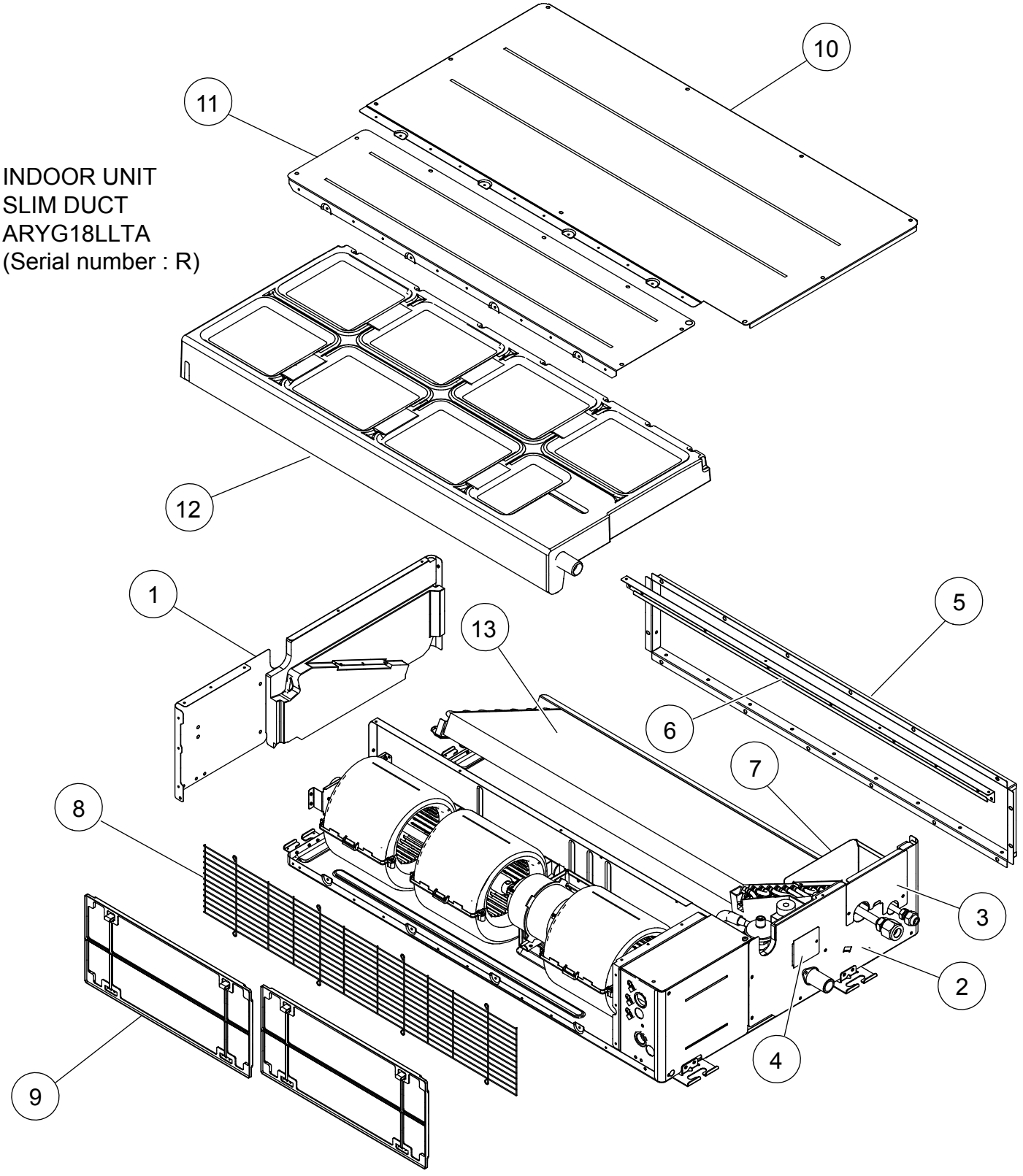

Ref	Description	Parts number	
1	Side Panel R Sub Assy	9379906012	
2	Side Panel L Sub Assy	9379907019	
3	Pipe Panel Sub Assy	9379900003	
4	Panel (Window) Sub Assy	9379915007	
5	Outlet Frame Assy	9380042013	
6	Front Panel (3 Fan)	9380595007	
7	Valve Cover Sub Assy	9379576017	

Ref	Description	Parts number	
8	Fan Guard (3 Fan)	9380590002	
9	Air Filter	9379575003	
10	Main Panel (3 Fan)	9380603009	
11	Cabinet Panel (3 Fan)	9380598008	
12	Drain Pan Sub Assy	9379901055	
13	Evaporator Total Assy	9380682066	

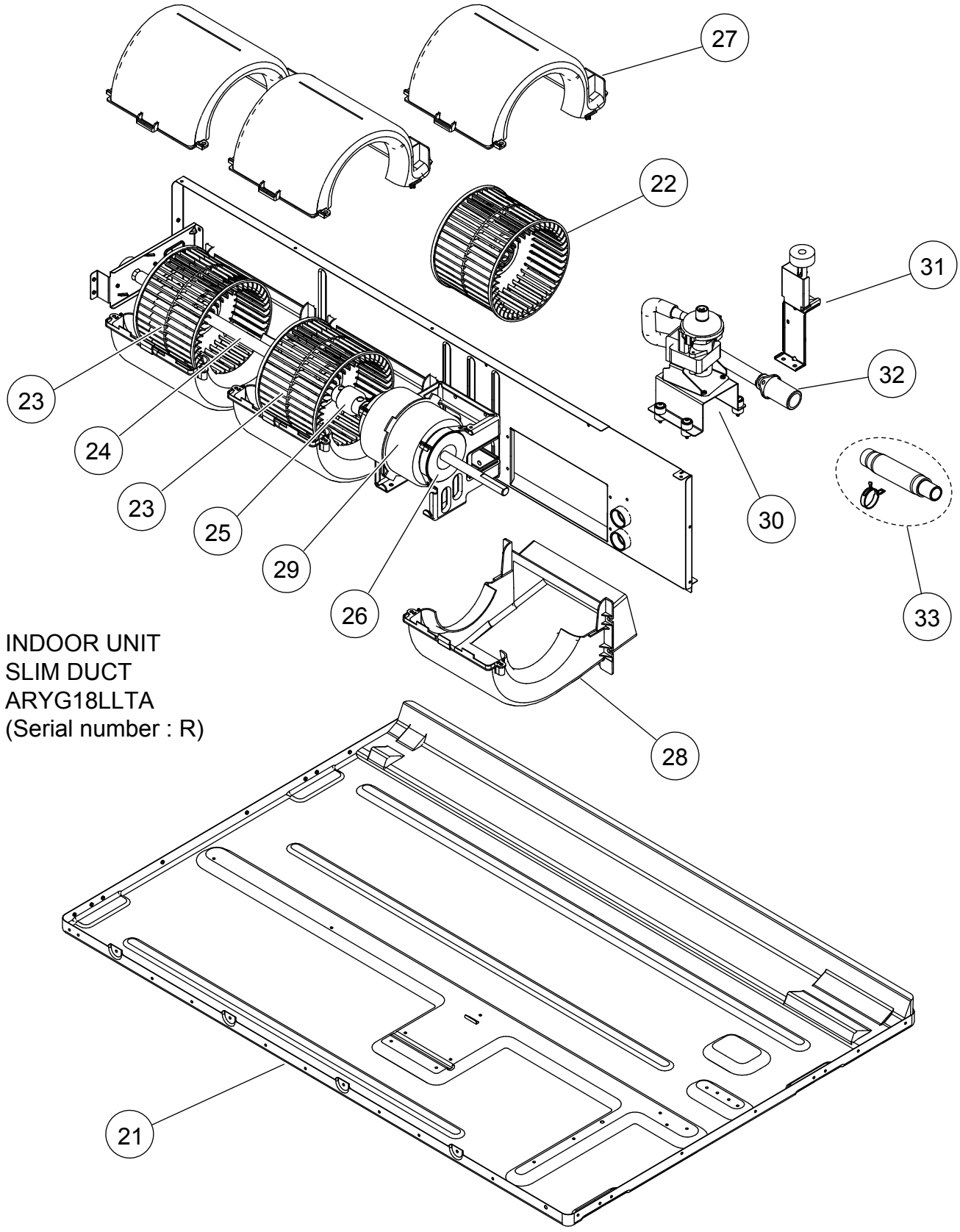

INDOOR UNIT
SLIM DUCT
ARYG18LLTA
(Serial number : R)

Ref	Description	Parts number	
21	Top Panel Sub Assy	9379908047	
22	Sirroco Fan Assy	9379570022	
23	Sirroco Fan Assy	9379570039	
24	Shaft	9380398004	
25	Joint Assy	9378038011	
26	Rubber (Vibration Proof)	9379644006	
27	Casing B	9379572002	

Ref	Description	Parts number	
28	Casing U	9379571005	
29	Fan Motor Assy	9602968022	
30	Drain Pump Sub Assy	9379914024	
31	Float Switch Sub Assy	9378593022	
32	Drain Hose Assy	9379913003	
33	Hose Sub Assy	9378450097	

INDOOR UNIT
SLIM DUCT
ARYG07LLTA
ARYG09LLTA
ARYG12LLTA
ARYG14LLTA
ARYG18LLTA
(Serial number : R)

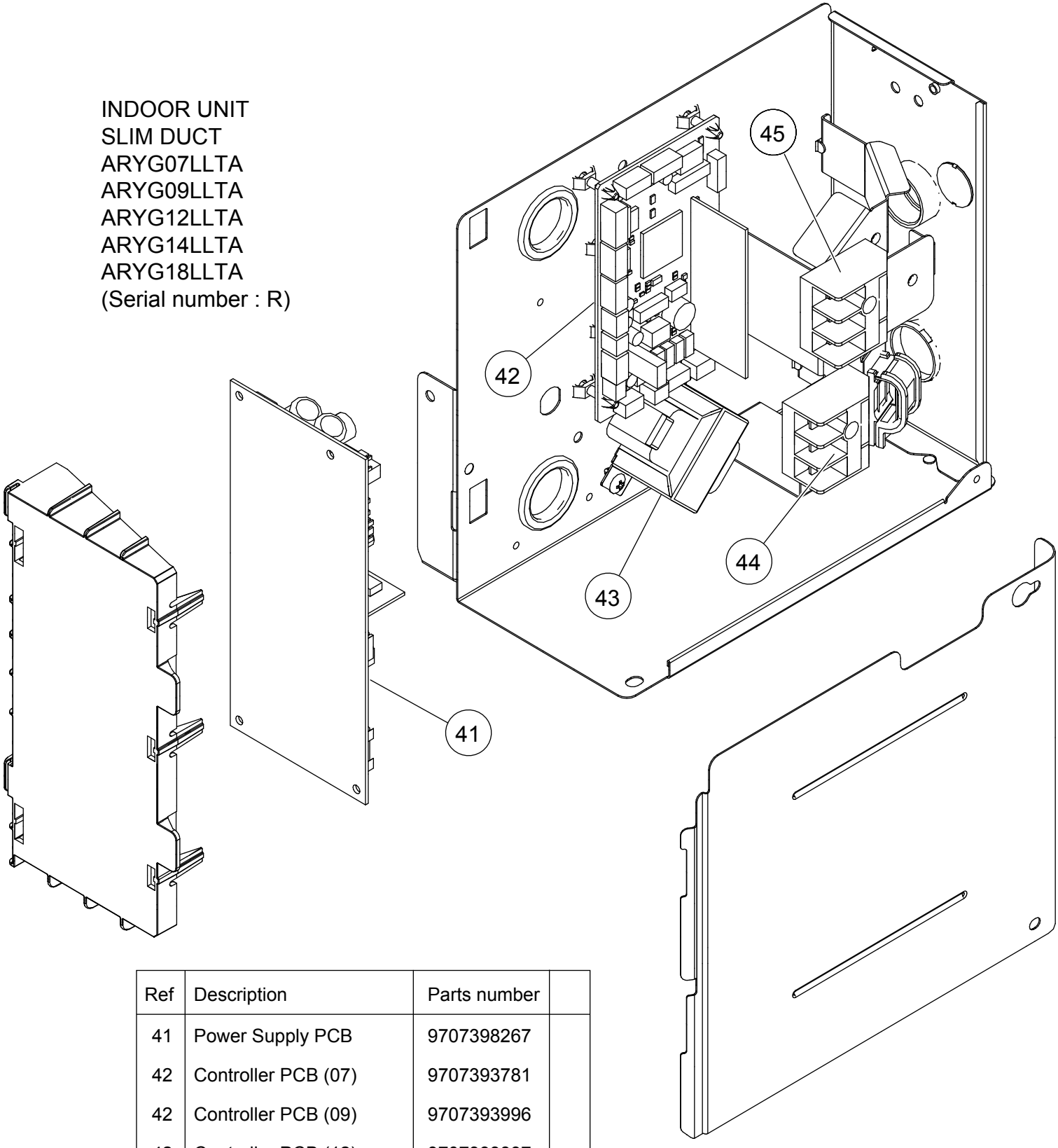

Ref	Description	Parts number	
41	Power Supply PCB	9707398267	
42	Controller PCB (07)	9707393781	
42	Controller PCB (09)	9707393996	
42	Controller PCB (12)	9707393897	
42	Controller PCB (14)	9707393903	
42	Controller PCB (18)	9707393910	
43	Reactor Assy	9707457018	
44	Terminal 3P	9306489045	
45	Terminal 3P (Wired Remote)	9703345012	
46	Wired Remote Control	9318593013	
--	Room Thermistor	9900653002	
--	Pipe Thermistor	9900498108	

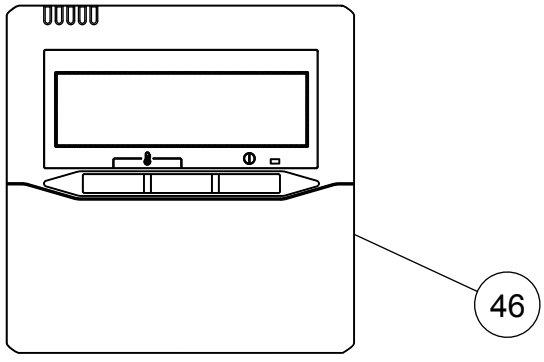

INDOOR UNIT
FLOOR CEILING
ABYG14LVTA
ABYG18LVTA

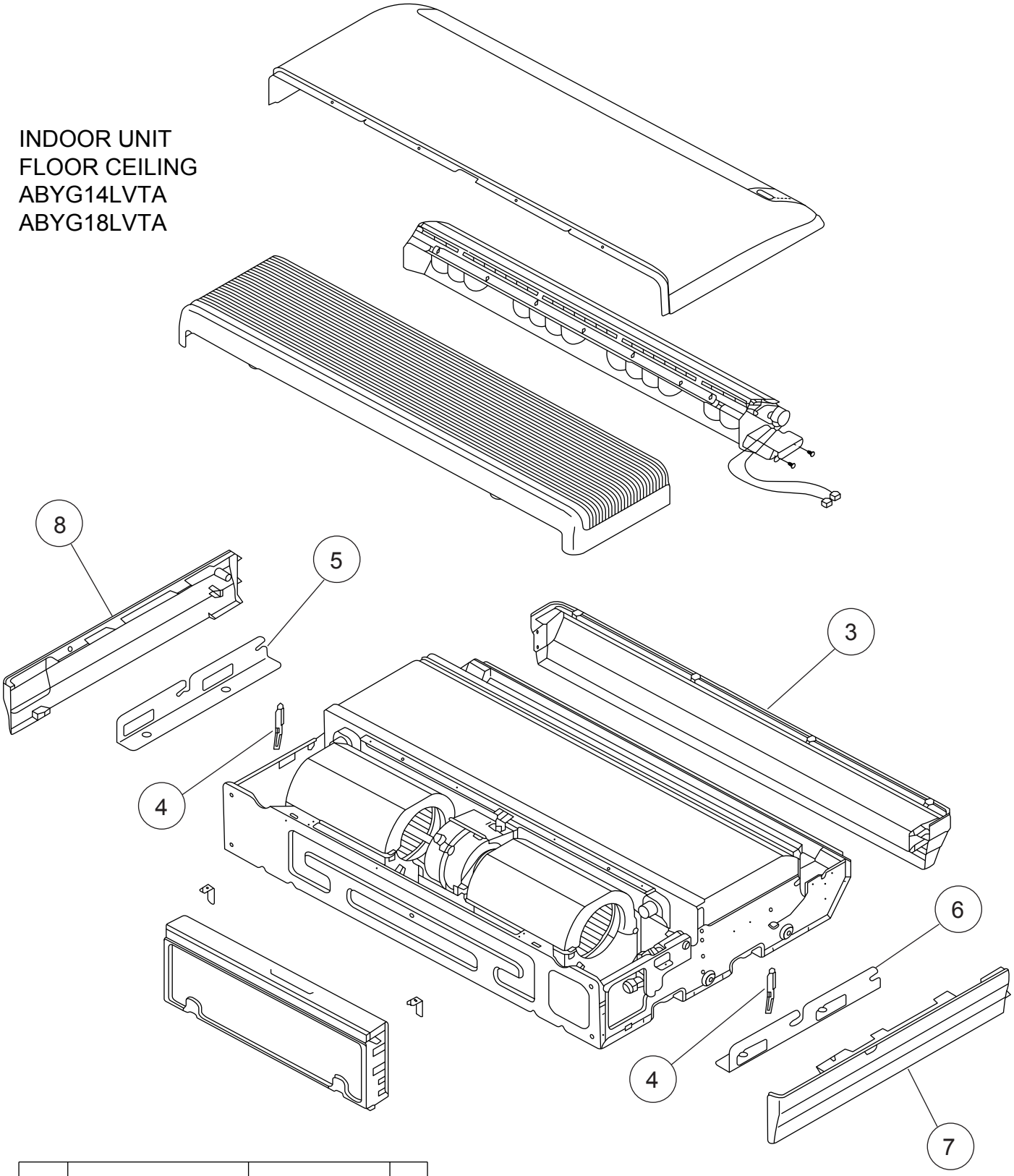

Ref.	Description	Part number	
1	Remote	9379219037	
2	Remote Holder	9305642045	
3	Top Cover	9358534021	
4	Arm	9358565001	
5	Hanger Bracket L	9358596005	
6	Hanger Bracket R	9358595008	
7	Cosmetic Panel R	9358535028	
8	Cosmetic Panel L	9358536025	

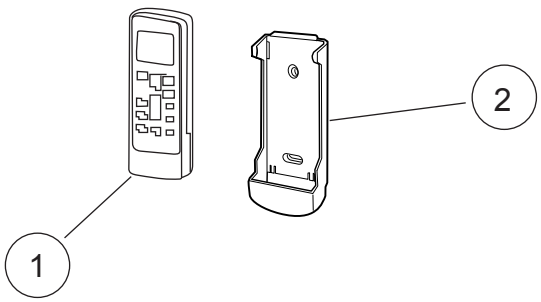

INDOOR UNIT
FLOOR / CEILING
ABYG14LVTA
ABYG18LVTA
Panel assy

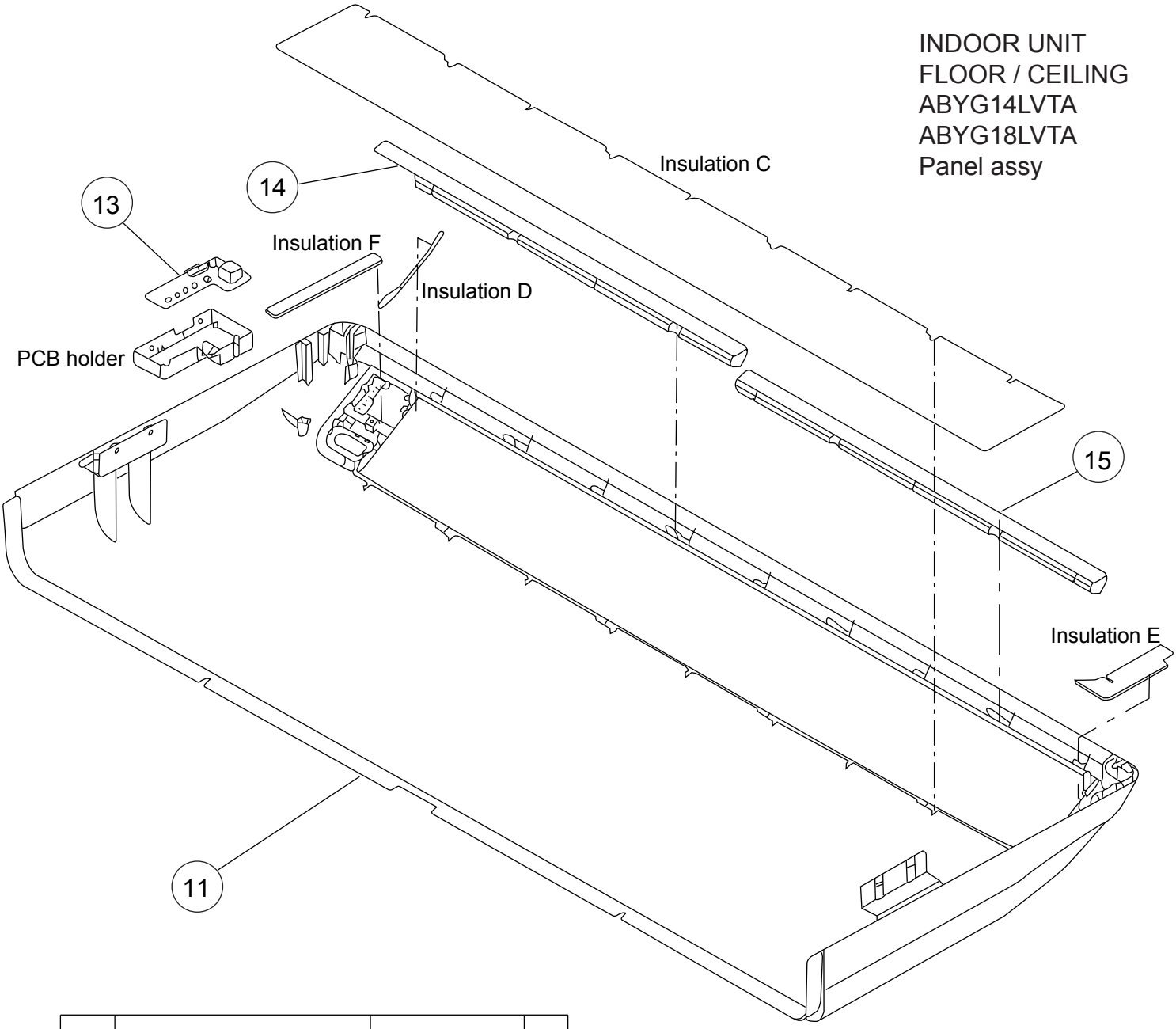

Ref.	Description	Part number	
11	Panel	9358531259	
12	Side Cover R Assy	9359069102	
13	Indicator PCB Assy	9705798090	
14	Insulation (Panel) A	9358574003	
15	Insulation (Panel) B	9358914007	
--	Panel Assy (with side cover R)	9359076322	

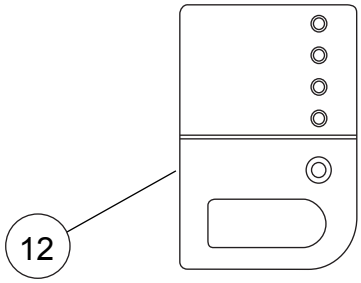

INDOOR UNIT
FLOOR / CEILING
ABYG14LVTA
ABYG18LVTA
Grille

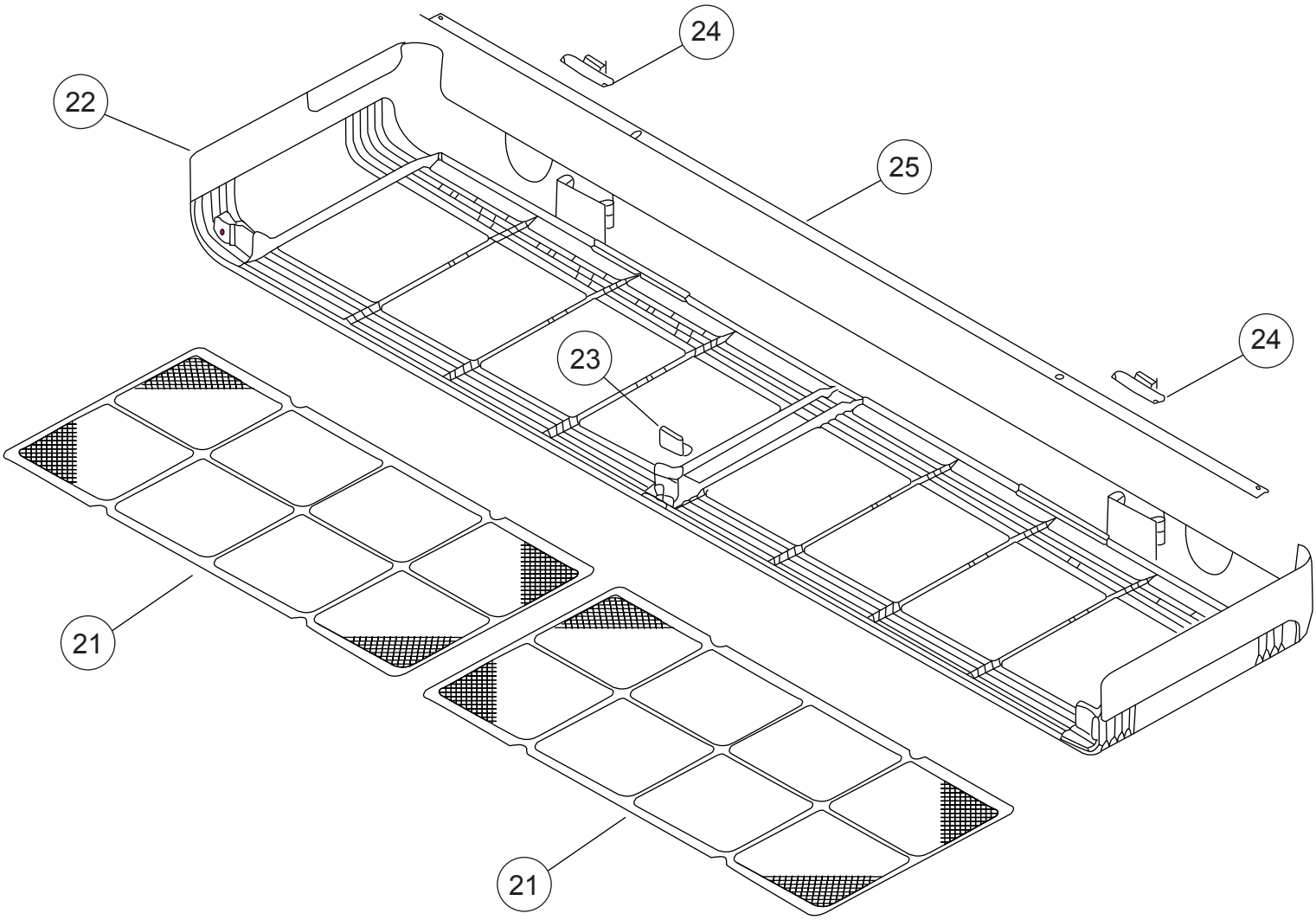

Ref.	Description	Part number	
21	Air Filter	9358567029	
22	Grill F	9358532027	
23	Arm Bracket	9359281009	
24	Grille Support	9358602003	
25	Filter Bracket	9358607008	

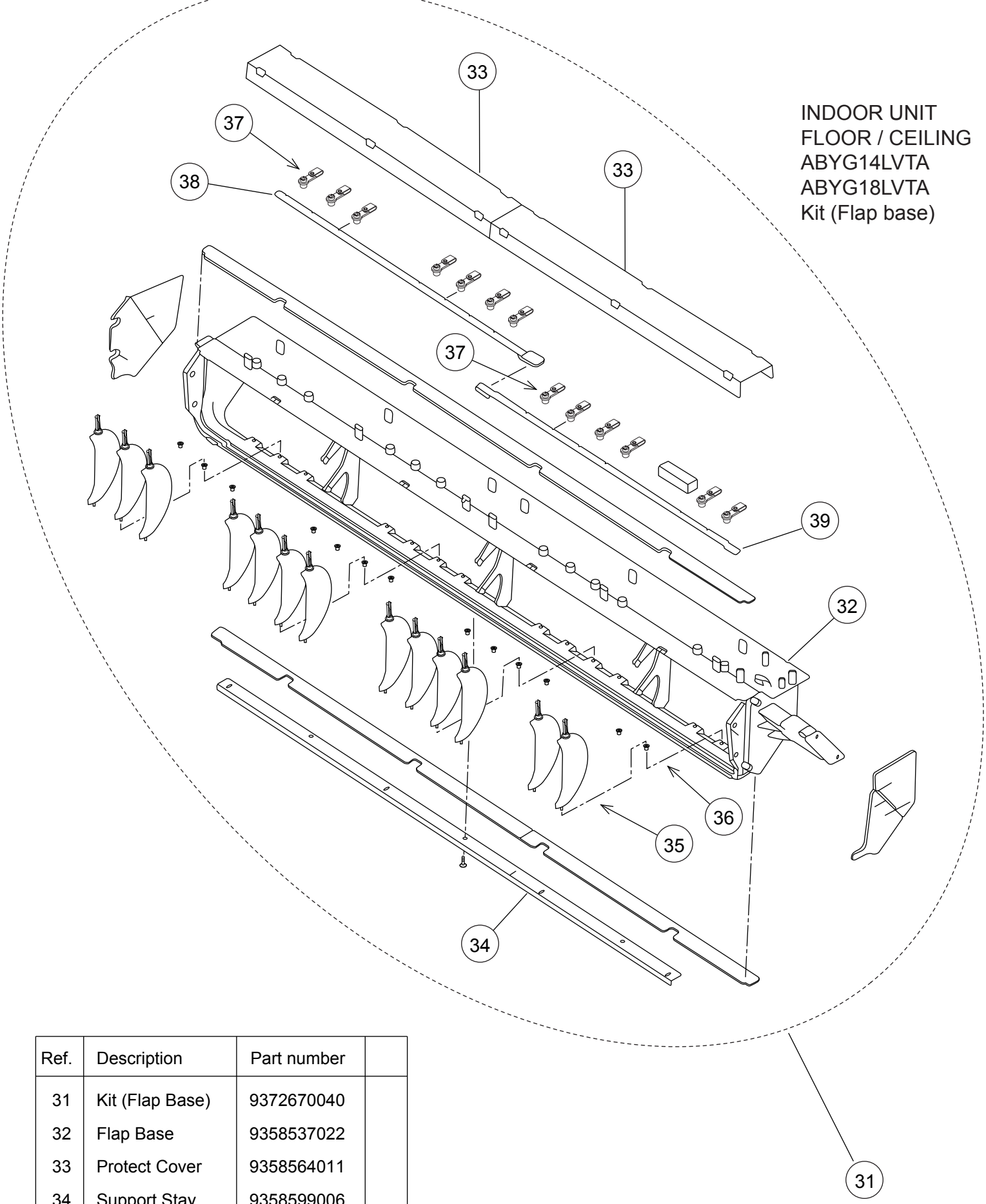

Ref.	Description	Part number	
31	Kit (Flap Base)	9372670040	
32	Flap Base	9358537022	
33	Protect Cover	9358564011	
34	Support Stay	9358599006	
35	Louver	9358561027	
36	Bushing B	9358554005	
37	Louver Stopper	9358555002	
38	Louver Rod	9358559017	
39	Motor Rod	9358560013	

INDOOR UNIT
FLOOR / CEILING
ABYG14LVTA
ABYG18LVTA
Flap base sub assy

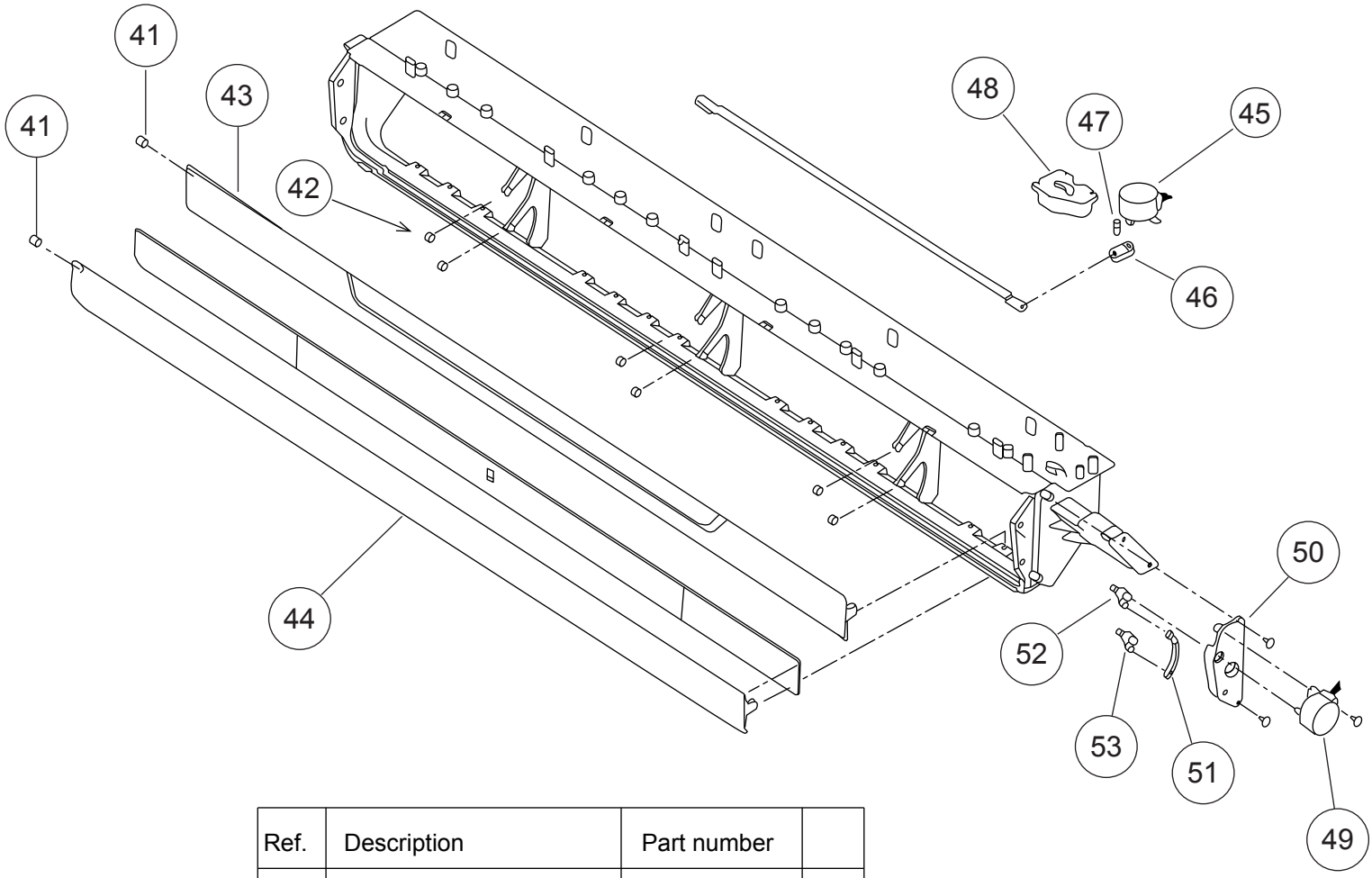

Ref.	Description	Part number	
41	Bushing	9357942001	
42	Bushing C	9358553008	
43	Flap (Upper) F	9358538029	
44	Kit (Flap Lower)	9372671023	
45	Step Motor H	9900297015	
46	Louver Link	9358556009	
47	Louver Shaft	9358557006	
48	Louver Link Cover	9358558010	
49	Step Motor-V	9900362010	
50	Motor Base	9358562017	
51	Motor Rod-A (Step V)	9358550007	
52	Flap Link-Upper (Step V)	9358551004	
53	Flap Link-Lower (Step V)	9358552001	

INDOOR UNIT
FLOOR / CEILING
ABYG14LVTA
ABYG18LVTA
Base assy

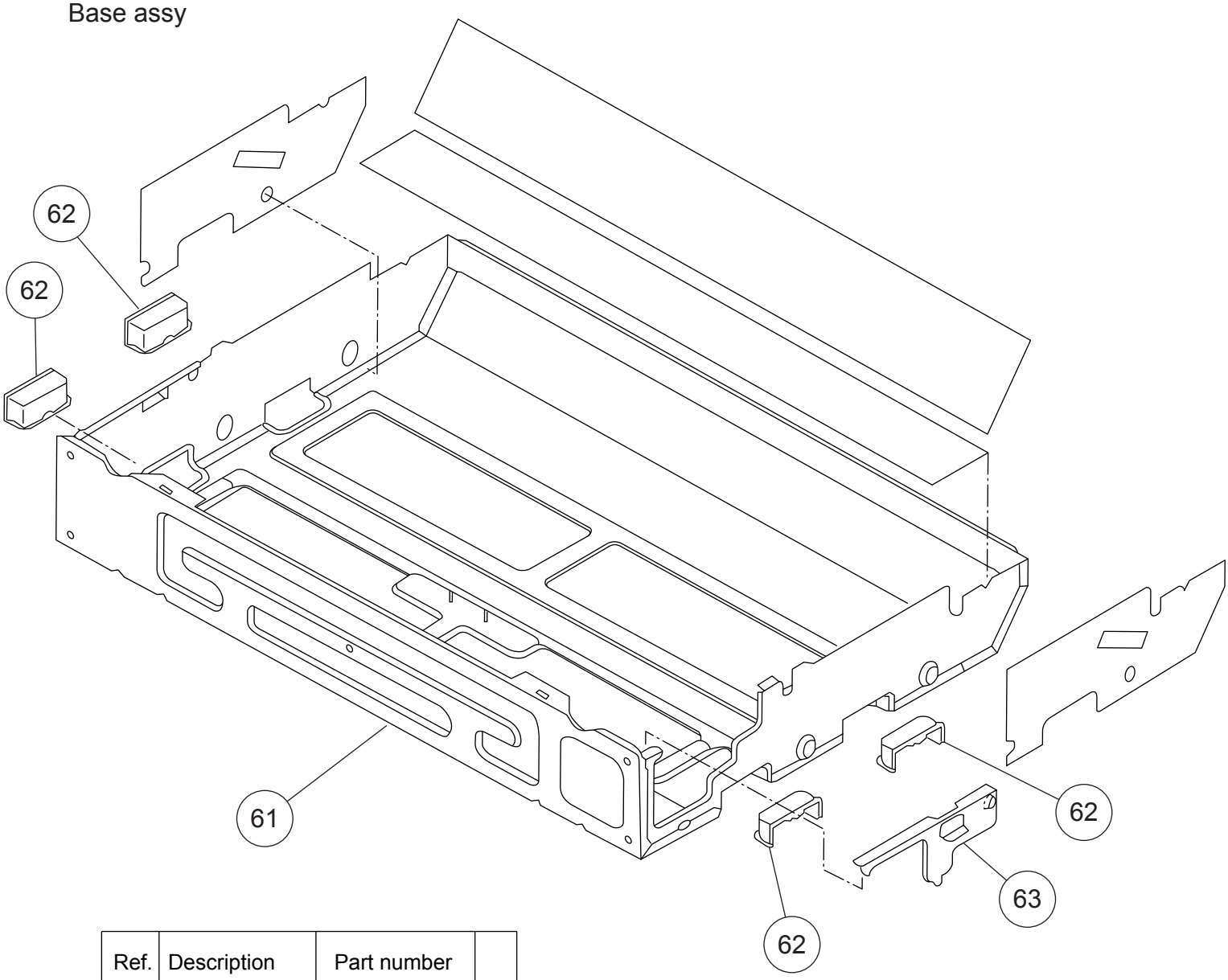

Ref.	Description	Part number	
61	Base Assy	9359061014	
62	Cap	9358563007	
63	Base Bracket	9358586006	

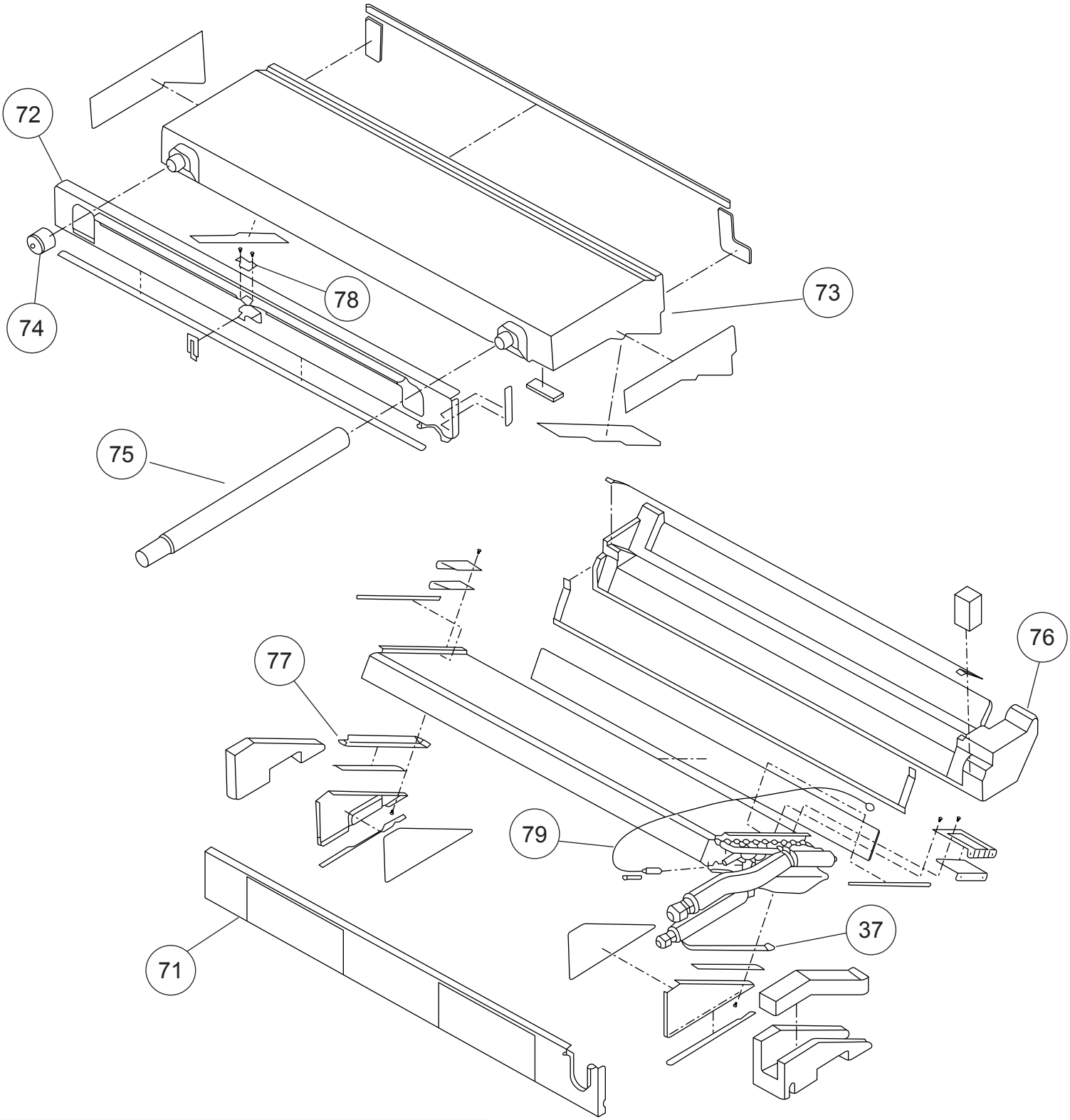

Ref.	Description	Part number	
71	Kit (Separate Wall A)	9372666012	
72	Kit (Separate Wall B)	9373448013	
73	Kit (Drain Pan Assy)	9372669013	
74	Drain Cap	9358746004	
75	Drain Hose Assy	9377785060	
76	Kit (Insulation Flap Base)	9372672013	
77	Kit (Dew Proof Plate)	9372673010	
78	Catch	9359096009	
79	Pipe Thermistor	9900022020	

INDOOR UNIT
FLOOR / CEILING
ABYG14LVTA
ABYG18LVTA
Drain pan assy
Evaporator

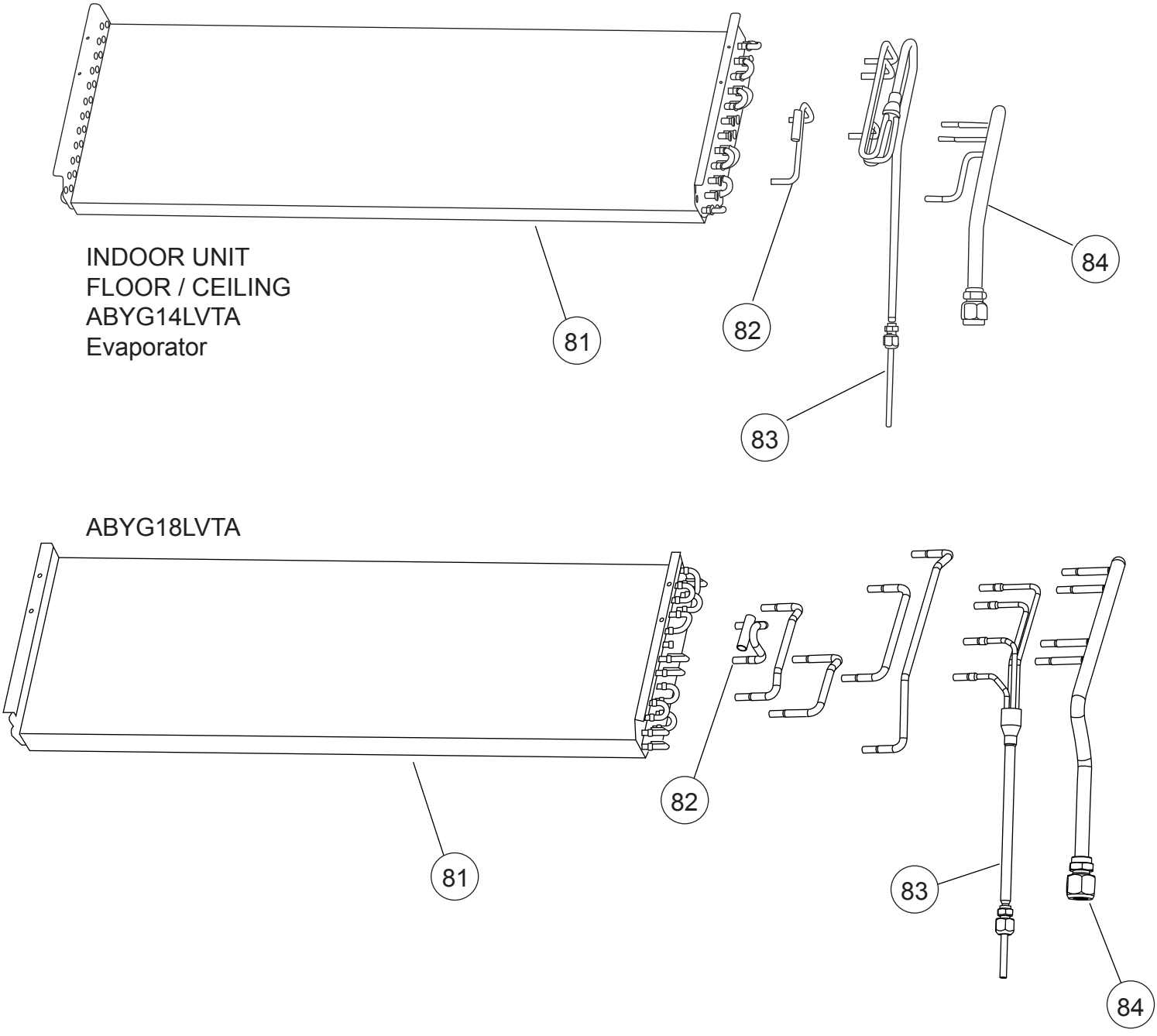

Ref.	Description	Part number		
		ABYG14LVTA	ABYG18LVTA	
81	Evaporator Assy	9362513029	9362513043	
82	Bypass Pipe Assy	9373032014	9377819017	
83	Distributor Assy	9373034018	9371325354	
84	Coupling Pipe Assy	9373038061	9373038382	

INDOOR UNIT
FLOOR / CEILING
ABYG14LVTA
ABYA18LVTA
Fan motor

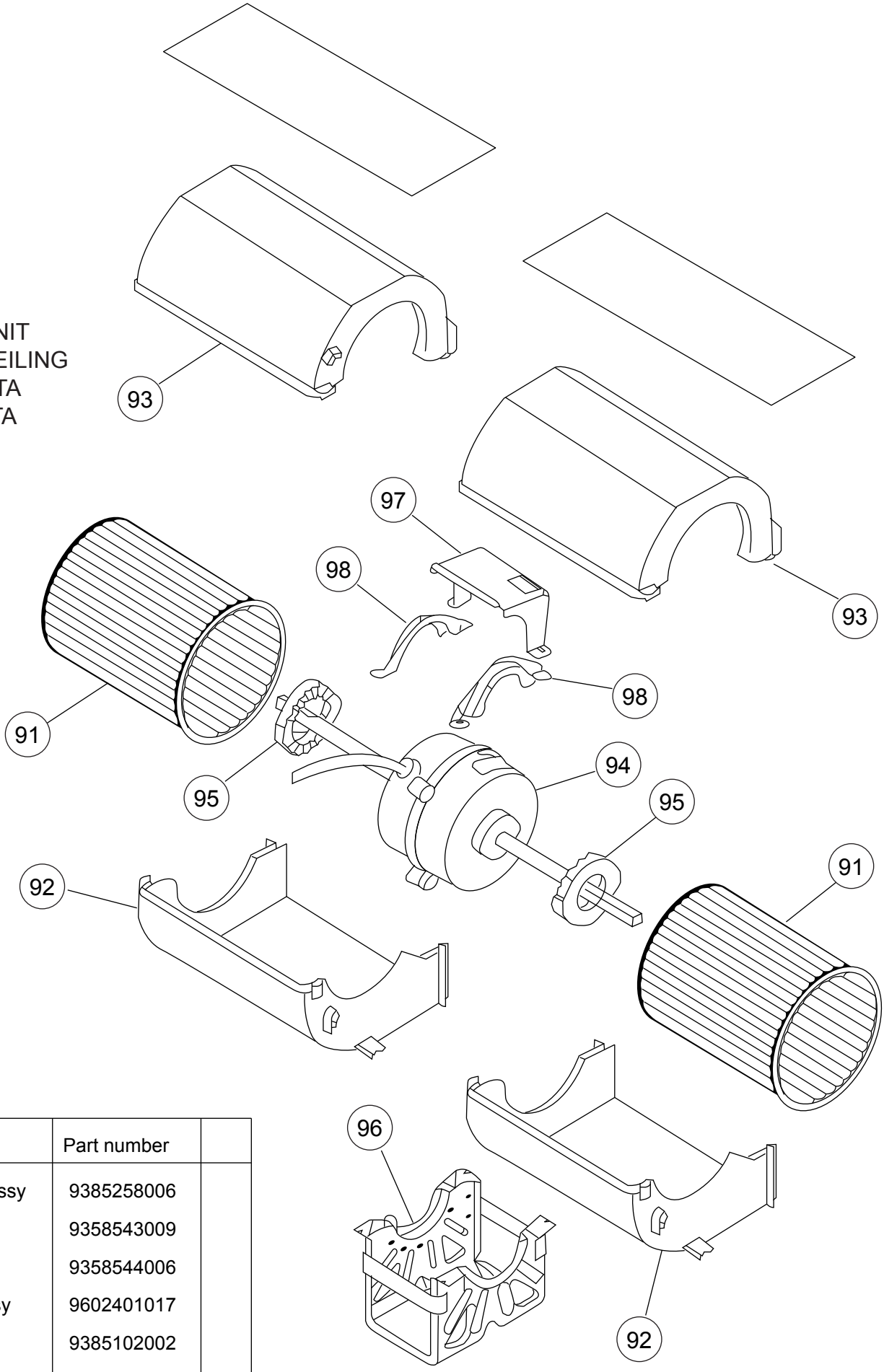

Ref.	Description	Part number	
91	Sirocco Fan Assy	9385258006	
92	Casing	9358543009	
93	Casing Cover	9358544006	
94	Fan Motor Assy	9602401017	
95	Rubber	9385102002	
96	Motor Fixing Table	9358591000	
97	Protector	9359282006	
98	Motor Fixture	9358594001	

INDOOR UNIT
FLOOR / CEILING
ABYG14LVTA
ABYG18LVTA
Control unit

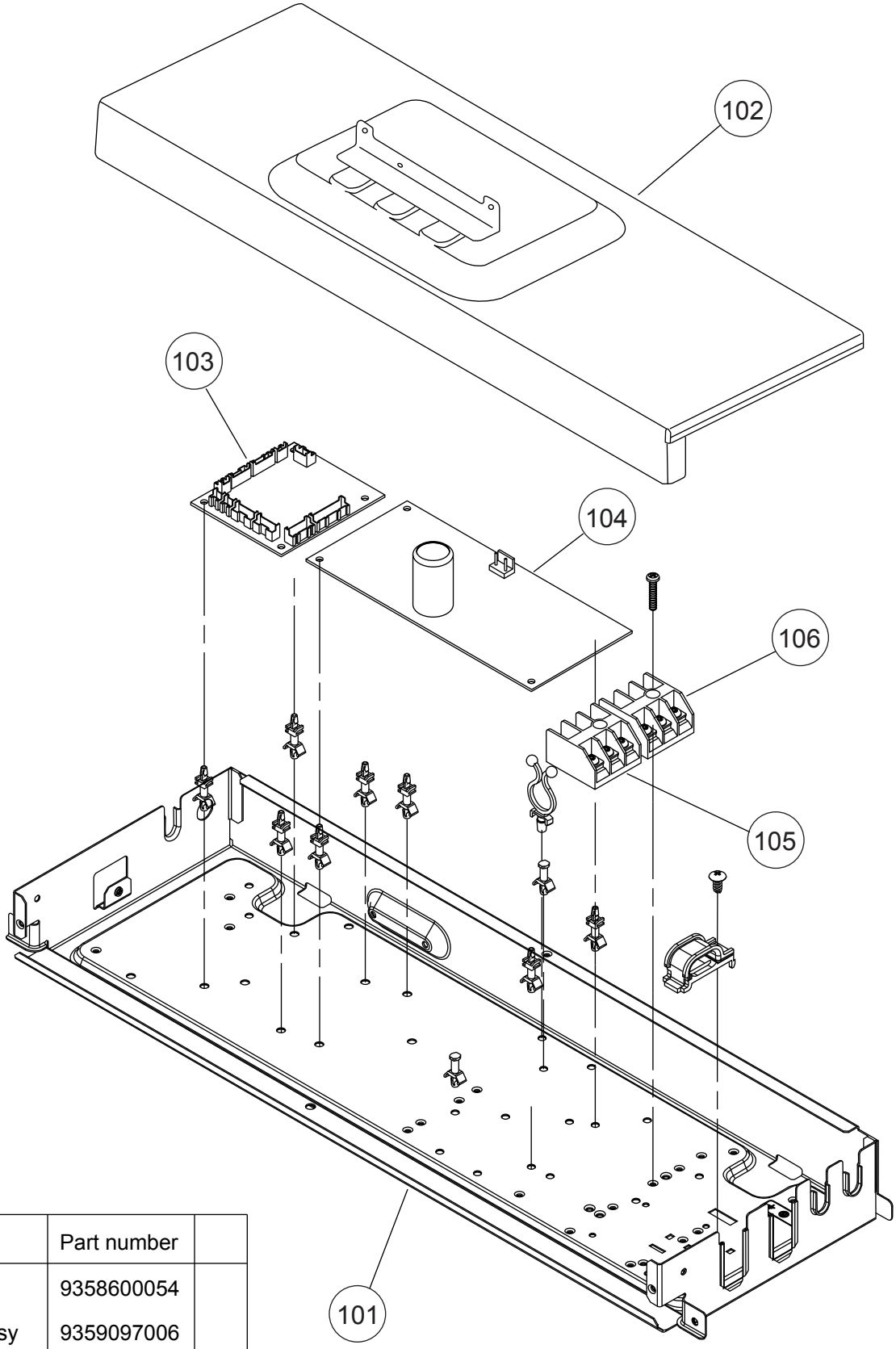

Ref.	Description	Part number	
101	Control Box	9358600054	
102	Control Box Cover Assy	9359097006	
103	Controller PCB Assy (14)	9707393842	
103	Controller PCB Assy (18)	9707393859	
104	Power Supply PCB Assy	9707398274	
105	Terminal 3P	9306489045	
106	Terminal 3P	9703345012	
--	Room Thermistor Assy	9703299087	

ACCESSORIES

OUTDOOR UNIT

Parts	Q'ty	Application	Parts number
Drain Assy	1	For outdoor unit drain piping work	9303029015
Drain Cap	2		313166024302
One-touch bush	2	For power supply cable and connection cable installation	9378779013
Binder	3	For binding power cable and connection cable	9374688012

BRANCH BOX

Parts	Q'ty	Application	Parts number
Coupler heat insulation (large)	(PY03A) 4 (PY02A) 3	For indoor and outdoor side pipe joint (gas pipe)	9378173569
Coupler heat insulation (small)	(PY03A) 4 (PY02A) 3	For indoor and outdoor side pipe joint (liquid pipe)	9378173521
Insulation (long)	(PY03A) 3 (PY02A) 2	For use on the section where the insulation fits onto this equipment. (indoor unit side)	9375620028
Insulation (short)	3	For use on the section where the insulation fits onto this equipment. (outdoor unit side)	9375620035
Insulation	(PY03A) 3 (PY02A) 2	To be used with this equipment's (indoor unit side) piping	9379779005
Hanger	4	For suspending the Branch box from ceiling	9379778008
Washer	8	For suspending the Branch box from ceiling	0700132278
Tapping screw	8	For installing the hanger (Ø 4×10)	-
Tapping screw	8	For installing the branch box on the wall (Ø 4×25)	-
Binder	1	For remote control cable binding	313035356905
Seal	1	To prevent small animals from entering inside	9380118008
Adapter	(PY03A) 3 (PY02A) 2	For indoor unit connection 12.7 mm (1/2 inch) -> 9.52 mm (3/8 inch)	9370244007
Adapter	2	For indoor unit connection 12.7 mm (1/2 inch) -> 15.88 mm (5/8 inch)	9374749034

INDOOR UNIT
COMPACT WALL MOUNTED
ASYG07, 09, 12LJCA

Name and Shape	Q'ty
Wall hook bracket	1
Remote control	1
Battery	2
Remote control holder	1
Cloth tape	1
Tapping screw (big)	8
Tapping screw (small)	2
Air cleaning filter	2

WALL MOUNTED
ASYG18, 24LFCA

Name and Shape	Q'ty
Wall hook bracket	1
Remote control	1
Battery	1
Remote control holder	1
Drain hose insulation	1
Cloth tape	1
Tapping screw (big)	8
Tapping screw (small)	2
Air cleaning filter	2
Air cleaning filter frame	2

INDOOR UNIT
COMPACT CASSETTE
AUYG07, 09, 12, 14, 18LVLA

Name and Shape	Q'ty	Application
Coupler heat insulation (Large)	1	For indoor side pipe joint (Gas pipe)
Coupler heat insulation (Small)	1	For indoor side pipe joint (Liquid pipe)
Special nut A (Large ßange)	4	For installing indoor unit
Special nut B (Small ßange)	4	For installing indoor unit
Template (Carton top)	1	For cealing openings cutting Also used as packing
Drain hose	1	For installing drain pipe
Hose Band	1	For installing drain hose
Drain hose insulation	1	For installing drain pipe
Remote controller	1	For air conditioner operation
Battery	2	For remote controller unit
Remote controller holder	1	For installing the remote controller
Tapping screw (M3 × 12mm)	2	For mounting the remote controller holder
Binder	2	For electrical wiring
Wire clamper	1	For electrical wiring

DECORATION PANEL
UTG-UFYD-W

Name and Shape	Q'ty	Application
Connector cover	1	For covering connector
Tapping Screw (M5 × 12 mm)	4	For mounting decora-tion panel
Tapping Screw (M4 × 12 mm)	1	For mounting connec-tor cover
L angle	2	For mounting the Hook Wire to the Decoration panel
Hook wire	2	For suspending the Decoration panel
Screw [pitch small] (M4 × 10 mm)	2	For mounting the Hook Wire (for metals)
Screw [pitch large] (M4 × 10 mm)	4	For mounting the L angle and Hook wire (for resins)

INDOOR UNIT
FLOOR
AGYG09LVCA
AGYG12LVCA
AGYG14LVCA

Name and Shape	Q'ty
Wall hook bracket 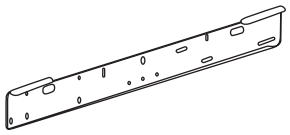	1
Remote control 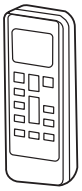	1
Battery 	2
Remote control holder 	1
Cloth tape 	1
Tapping screw (M4 x 25 mm) 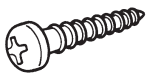	9
Tapping screw (M3 x 12 mm) 	2
Air cleaning filter 	2

INDOOR UNIT
SLIM DUCT
ARYG09LLTA
ARYG12LLTA
ARYG14LLTA
ARYG18LLTA

Name and Shape	Q'ty	Application
Installation template	1	For positioning the indoor unit
Washer	8	For installing indoor unit
Coupler heat insulation (Large)	1	For indoor side pipe joint (Large pipe)
Coupler heat insulation (Small)	1	For indoor side pipe joint (Small pipe)
Binder	Medium 3	For power supply and remote control cable binding.
	Large 4	For fixing the coupler heat insulation.
Filter (Small)	2	(ARU9RLF ARU12RLF ARU24RLF)
Filter (Big)	2	(ARU18RLF)
	1	(ARU24RLF)
Drain hose	1	For installing drain pipe 3/4 in. (O.D. 1-1/16 in.)
Hose band	1	For installing drain hose
Drain hose insulation B	1	Insulates the drain hose
Wired remote control	1	
Remote control cable	1	For connecting the remote control
Tapping screw (M4 × 16 mm)	2	For installing the remote control

INDOOR UNIT
FLOOR / CEILING
ABYG14LVTA
ABYG18LVTA

Name and Shape	Q'ty	Name and Shape	Q'ty
screw (M4 × 10mm)	2	Installation template Positioning for under ceiling type	1
bracket (left) For suspending the indoor unit from ceiling	1	bracket (right) For suspending the indoor unit from ceiling	1
Anchor bolt (M12) For suspending the indoor unit from ceiling	4	Spring washer For suspending the indoor unit from ceiling	4
Special nut For suspending the indoor unit from ceiling	4	Wall bracket For suspending the indoor unit on the wall	2
screw(M4 × 20mm) For fixing the wall bracket	6	Coupler heat insulator (Large) For indoor side pipe joint(Large pipe)	1
Coupler heat insulator (Small) For indoor side pipe joint (Small pipe)	1	Binder(Large) For fixing the drain hose	1
Binder(Small) For electrical wiring	2	Wire clamper For electrical wiring	1
Drain hose	1	Hose Band For installing drain hose	1
insulation(Drain hose) Adhesive type 100 x 220(mm)	1	VT wire For fixing the drain hose L 280mm	1
Remote controller For air conditioner operation	1	Battery For remote controller	2
Remote controller holder	1	screw (M3 × 12mm) For remote controller holder installation	2

1009G3833